EXACT-MODEL INSTALLATION GUIDE

Snow VC-50

Keep your injection controller, or plan a new FD-managed system. Wiring, measured protection and app setup.

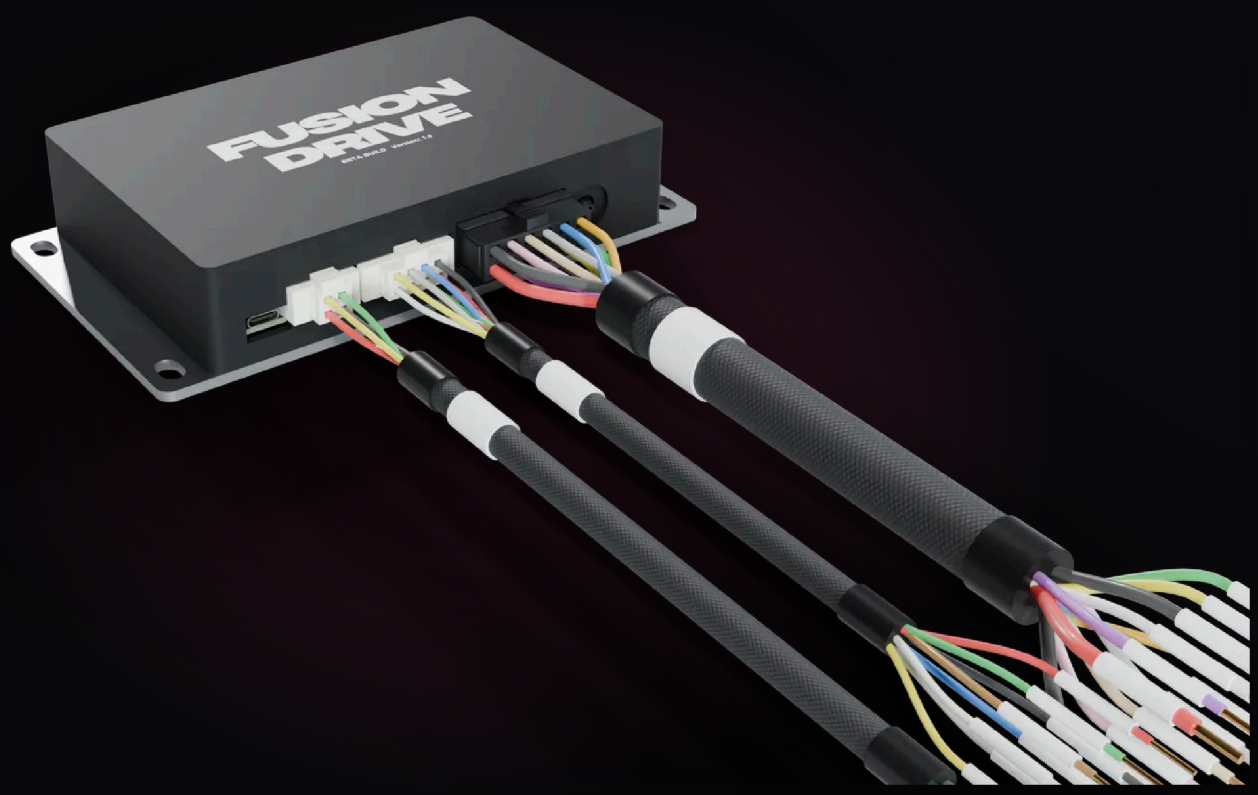

Contents

1 Identify this exact installation 2

2 Wiring diagrams 3

W1 · Snow VC-50 retained · independent FD measurement · W2 · Snow VC-50 · direct FD pump wiring

3 Original connections and native settings 9

4 FD connections and installation record 10

5 Route A — independent delivery measurements 11

6 Route A — FD monitoring settings 12

7 Route A — the controller has no documented remote permit 13

8 Route B — what must be recreated 14

9 Route B — direct FD pump wiring 15

FD pump settings

10 Commissioning truth table and recovery 17

11 Automations and tuner logging 18

12 Sources and release record 19

1

SNOW VC-50

Identify this exact installation

This guide applies to 210/210-BRD using the New Style VC-50 and the external three-wire pressure sensor documented in sno210v3new.pdf, version 1.0. The round display is also the injection controller. Match the separate pressure sensor and pink/brown/blue wiring; an older internally sensed VC-50 is a different installation.

VC-50 Water Methanol Controller; manufacturer product image, identification only. Match the manual/harness revision.

This is a local installation-design review, not evidence that these devices have been electrically tested together. The manufacturer photograph or illustration identifies the product; it is not a connector pinout. Terminal labels below take precedence over a wire colour guessed from a photograph. Match the hardware, harness, firmware and manual before using either route.

Keep the controller: retain its native pump logic and display, add actual fluid measurements and record them with vehicle data. The reviewed manual does not establish a separate remote-enable input; this guide does not invent one.

Replace the controller: reuse individually qualified fluid components with direct compatible FD OUT drive and a new boost-based pump calibration. The exact functions that must be recreated are listed in Route B.

SNOW VC-50

2 Wiring diagrams

Start here for the actual wire connections. First locate the FD leads, then choose the drawing for the route you are installing.

Harness B · J6 · 12-way

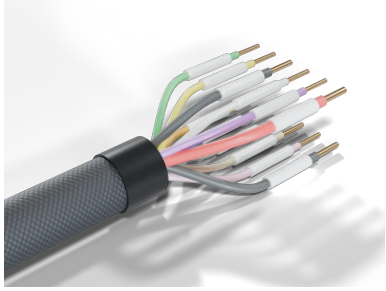

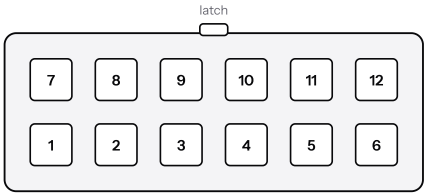

Bottom row, left to right: 1 BATT+ · 2 AUX1 · 3 IGN · 4 GND · 5 CAN2 H · 6 CAN2 L
Top row, left to right: 7 GND · 8 AUX2 · 9 OUT4 · 10 OUT3 · 11 OUT2 · 12 OUT1

Looking into the plug's mating face with the latch at the top

Original FusionDrive harness reference. Look into the plug mating face with the latch at the top. Wire drawings show logical terminal positions.

Harness C · J8 · 8-way

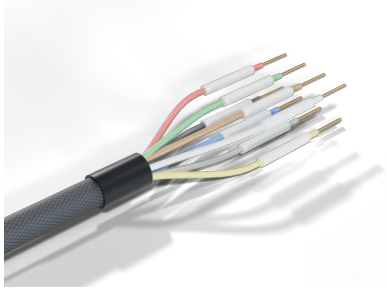

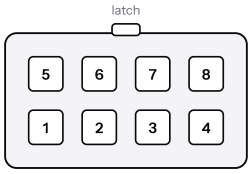

Bottom row, left to right: 1 IN1 · 2 IN2 · 3 IN3 · 4 +5V OUT
Top row, left to right: 5 IN4 · 6 IN5 · 7 IN6 · 8 GND

Looking into the plug's mating face with the latch at the top

Original FusionDrive harness reference. Look into the plug mating face with the latch at the top. Wire drawings show logical terminal positions.

Wire colours match the FD flying leads; the accessory segment uses its documented colour where known. A small sleeve marks an insulated splice. Match the lead label and cavity number. Harness B AUX1/AUX2 are low-side ground sinks. OUT1–4 supply positive voltage from the dedicated feed. Harness C inputs accept conditioned 0–5 V signals. Never join competing supplies or output drivers.

1. W1 · Snow VC-50 retained · independent FD measurement
2. W2 · Snow VC-50 · direct FD pump wiring

2.1 W1 · Snow VC-50 retained · independent FD measurement

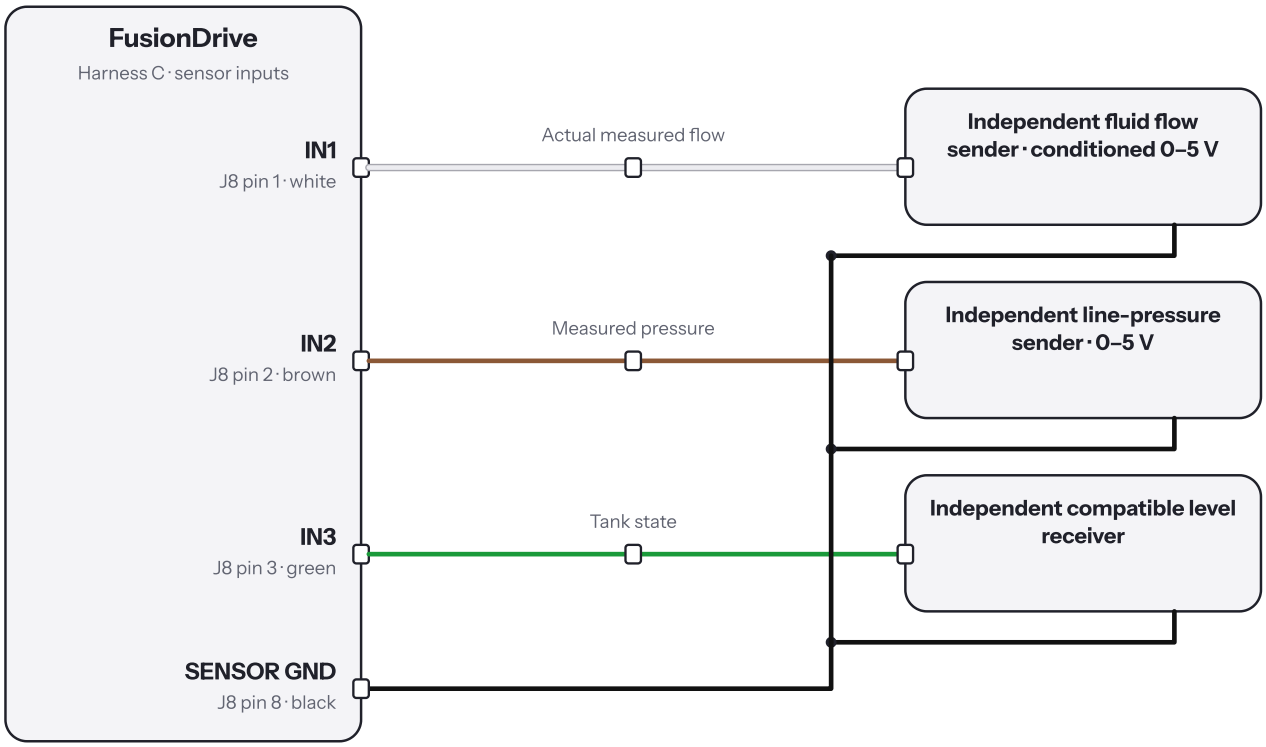

Power each sender from its specified supply. Do not connect two 5 V supplies together.

No pump or solenoid current through J8 sensor ground. Calibrate each measurement separately.

Native pump/display circuit remains intact. New independent sensors measure real delivery; no undocumented native enable pin is shown.

Terminal-to-terminal wiring schedule

From	To	Signal / electrical condition
Independent fluid flow sender · conditioned 0–5 V	FD J8-1 · IN1	Actual measured flow 0–5 V only; calibrated transfer
Independent line-pressure sender · 0–5 V	FD J8-2 · IN2	Measured pressure 0–5 V only
Independent compatible level receiver	FD J8-3 · IN3	Tank state 0–5 V; verify full/empty/open circuit
Sensor signal references	FD J8-8 · sensor ground	Signal return Reference only; no pump current

OFF / released: FD off: original controller remains independent; FD measurements unavailable.

ON / active: Original controller owns injection; FD observes calibrated sources.

Qualification: Select actual fluid-rated senders and receivers. Manufacturer waveform/voltage must never reach an FD ADC unconditioned. No physical integration test completed.

Accessory-side connections · 1

Snow VC-50 · accessory-side connections

Accessory connections for the selected route. Grey bands are complete looms; blue dashes are pressure hoses.

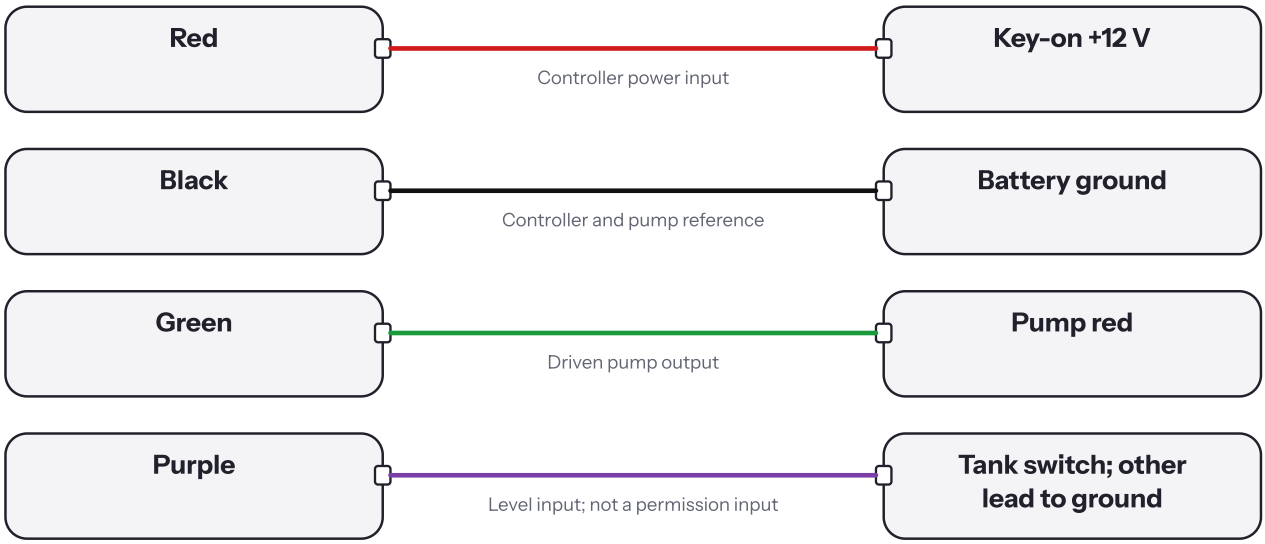

Match the exact harness/revision in the source manual. Unspecified wire colours are drawn black.

Complete the accessory-side circuit for the selected route. Retain or transfer connections as specified in the installation steps; do not join competing supplies or output drivers.

Accessory-side connections · 2

Snow VC-50 · accessory-side connections

Accessory connections for the selected route. Grey bands are complete looms; blue dashes are pressure hoses.

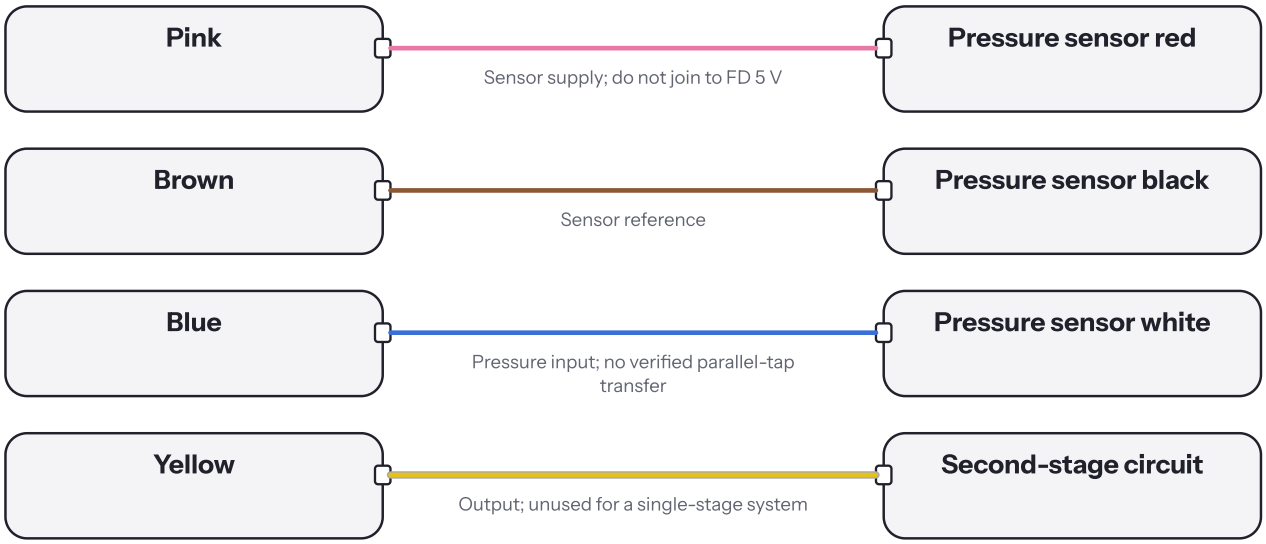

Match the exact harness/revision in the source manual. Unspecified wire colours are drawn black.

Complete the accessory-side circuit for the selected route. Retain or transfer connections as specified in the installation steps; do not join competing supplies or output drivers.

2.2 W2 · Snow VC-50 · direct FD pump wiring

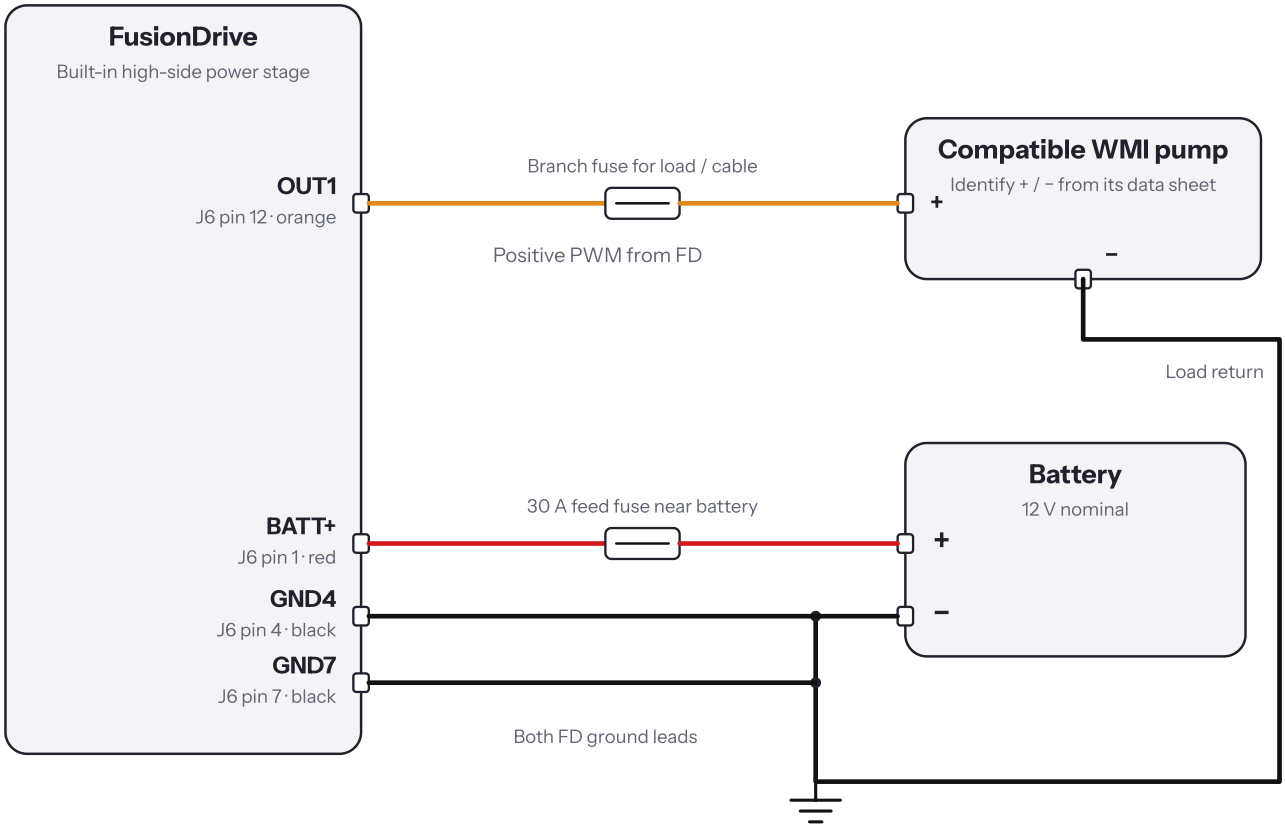

OUT1–4: designed 10 A each, shared 30 A fused feed. Verify actual running / start current and heat.

Disconnect both old controller/load wires. Use the load maker's required suppression and PWM frequency.

Disconnect both original driver-to-load conductors. FD supplies the load positive side from its dedicated fused feed; the load negative returns to rated power ground. Use an external power interface only when this load exceeds FD capacity or requires a different electrical drive.

Terminal-to-terminal wiring schedule

From	To	Signal / electrical condition
Battery positive through suitable fuse (30 A maximum shared feed)	FD BATT+ · J6 pin 1 · red	Dedicated load supply Positive 12 V
FD GND · J6 pin 4 · black	Rated common power ground	First FD ground Ground
FD GND · J6 pin 7 · black	Rated common power ground	Second FD ground Ground
FD OUT1 · J6 pin 12 · orange via suitable branch fuse	Compatible WMI pump positive	PWM load supply High-side positive
Compatible WMI pump negative	Rated power ground	Load return Ground

OFF / released: FD output off removes its sourced load command. Verify the load is inactive, no alternate feed/backfeed remains, and the installation retains its required mechanical or independent protection.

ON / active: The saved FD controller or automation drives the assigned output only when its configured conditions permit. A duty request does not prove measured flow, valve movement or fan speed.

Qualification: FD has four high-side PWM power outputs designed for 10 A each, sharing a 30 A fused feed. A compatible load connects directly to an OUT; no additional driver is needed within its current, inrush, voltage and switching requirements. AUX1/2 are separate 1 A-class low-side sinks. Verify the complete installation on the delivered board; four simultaneous 10 A loads exceed the shared budget. Match load polarity, frequency, suppression, return wiring and physical OFF response; a manufacturer kit name does not establish those values.

SNOW VC-50

3 Original connections and native settings

Native terminal / wire	Original destination	Function
Red	Key-on +12 V	Controller power input
Black	Battery ground	Controller and pump reference
Green	Pump red	Driven pump output
Purple	Tank switch; other lead to ground	Level input; not a permission input
Pink	Pressure sensor red	Sensor supply; do not join to FD 5 V
Brown	Pressure sensor black	Sensor reference
Blue	Pressure sensor white	Pressure input; no verified parallel-tap transfer
Yellow	Second-stage circuit	Output; unused for a single-stage system

The native connections above are read from the exact manufacturer manual, pages 7–11; fluid hardware 2–6. They describe what stays connected in the retained installation; they are not new FD connections. Retain the native Injection Start, Max Injection, second-stage and Injection On/Off settings. Single-stage installations set the second stage above 50 psi to OFF. The level indication is a warning, not documented proof of pump shutdown. Prime has explicit operating conditions in the original manual; do not reinterpret it as an unrestricted bench command. Manufacturer manual, pp8–11.

Keep the round VC-50 running the pump and showing its original injection state. Its green and yellow wires are outputs, not remote-enable inputs. Its purple level circuit stays on Snow. The pressure sensor remains connected only to Snow unless an independently qualified buffer and its exact transfer specification are available.

Keep a labelled photograph of the original harness and an installation record of the native settings. Where an installed lead differs from this table, stop and resolve the revision rather than repinning to make it resemble this drawing.

4

SNOW VC-50

FD connections and installation record

This guide is for **FD Design LS**. J8 has conditioned 0–5 V inputs: IN1/J8-1, IN2/J8-2, IN3/J8-3, IN4/J8-5, IN5/J8-6 and IN6/J8-7. J8-8 is sensor ground; J8-4 is 5 V sensor power. Do not join FD's 5 V supply to another controller's supply or carry motor current through sensor ground.

AUX1/J6-2 and AUX2/J6-8 are nominal 1 A-class **ground sinks**, not voltage supplies or analog outputs. J6-4/7 are grounds. OUT1–4/J6-12/11/10/9 are high-side channels supplied by J6-1. FD has four high-side PWM power outputs designed for 10 A each, sharing a 30 A fused feed. A compatible load connects directly to an OUT; no additional driver is needed within its current, inrush, voltage and switching requirements. AUX1/2 are separate 1 A-class low-side sinks. Verify the complete installation on the delivered board; four simultaneous 10 A loads exceed the shared budget.

Record controller revision, pump, nozzle(s), second-stage/anti-siphon valve, tank sender, native settings and existing engine fallback. Label original conductors before disconnection. Reserve channels only after checking existing boost, EBC, nitrous and automation ownership. Any substituted channel must change in both the drawing and ESP configuration.

5

SNOW VC-50

Route A — independent delivery measurements

> Use wiring diagram W1 in the Wiring diagrams chapter for the exact connections. Return here for the installation and app setup steps.

The native pump circuit stays intact. Add fluid-rated sensors at recorded locations: flow before a branch cannot prove delivery to every nozzle, and pressure alone does not prove nozzle flow.

1. Connect a calibrated 0–5 V flow sender to **IN1/J8-1**, reference **J8-8**. Power it as specified by its maker. Pulse meters need a documented pulse-to-analog/CAN interface; FD inputs are not pulse counters.
2. Connect an independent 0–5 V pressure sender to **IN2/J8-2**, reference J8-8. Use an appropriate pressure range and fluid-compatible wetted parts.
3. Connect an independent compatible level receiver to **IN3/J8-3**. Verify full, empty and open-wire states. Do not parallel the controller's tank circuit or route a 12 V lamp signal to FD.
4. Optional external demand goes through a qualified isolated pump-waveform receiver to **IN4/J8-5**. Rate it for actual voltage, frequency, common-mode range and both pump terminals. A divider to chassis ground is not an approved substitute.
5. Verify receiver voltages before attaching J8; test receiver-power loss and disconnected sensors too.

In **Sensors**, name these `WMI measured flow`, `WMI line pressure`, `WMI tank` and `External WMI demand`. Enter actual transfers and units, compare zero and known working points, save to ESP and reload. Verified CAN sources may replace physical inputs, but require their real frame definition, scale, freshness and missing-data behavior.

6

SNOW VC-50

Route A — FD monitoring settings

Sensor dashboards and logs work without a demand receiver. Dedicated WMI **External controller** modes require a fresh external-demand source; flow, boost or RPM cannot be substituted to satisfy this field.

With a qualified receiver, select **WMI Control > Keep my controller > Monitor only** and **Connection** showing **No WMI output required**. Bind actual demand, measured flow, line pressure and tank sources. The formula is `calibrated source × Source scale + Source offset`: required units are percent demand, mL/min flow, psi pressure and percent level. Already-correct units use scale 1/offset 0. A verified 0–5 V = 0–100% receiver uses scale 20/offset 0; this arithmetic does not establish an unknown wire's transfer function.

Binary activity is 0/100%, not partial duty: disable **Expected flow by duty** and use a measured active-flow envelope. Genuine percentage demand can use min/max envelopes at each 10% point, including idle maximum and hydraulic delay.

Set **Maximum input age**, startup grace, threshold debounce and healthy OFF recovery from measured response. Missing/stale assigned sources cut immediately in controlling modes; grace only delays minimum-flow/pressure checks. Save with **Save WMI Settings**, acknowledge, then **Reload saved values**. Monitor-only does not stop the original pump; any linked protection needs separate commissioning.

7

SNOW VC-50

Route A — the controller has no documented remote permit

Leave both FD AUX outputs out of the original pump and controller wiring for this route. Neither disconnecting the power feed, spoofing low level, nor shorting a sensor input is presented as a supported control method. A display's local injection OFF button is not evidence of an accessible remote OFF terminal.

FD can still show the added sensors, log them alongside the car and run a separately commissioned response on equipment FD actually controls. The retained controller remains responsible for injection. If a later manufacturer supplement supplies an explicit enable or pause input, document its exact revision, polarity, timing and failure behavior before adding that interface; do not infer it from an unused output.

8

SNOW VC-50

Route B — what must be recreated

Record whether the installed 210 has one nozzle or a second-stage upgrade. If there are two fluid paths, identify which valve opens the second path and which valve prevents siphoning. Those are different functions. The single FD WMI pump command does not automatically reproduce the VC-50 second-stage menu or its solenoid diagnostic.

The OLED gauge, native low-level display, priming behavior and second-stage fault indication are no longer your controller interface. FD can replace the boost-based pump command after a new calibration, but a second-stage solenoid needs a separately designed output and validation. Removing the gauge removes its diagnostics; electrical pump-driver protection and actual fluid-delivery monitoring must be provided deliberately.

SNOW VC-50

9 Route B — direct FD pump wiring

Use wiring diagram W2 in the Wiring diagrams chapter for the exact connections. Return here for the installation and app setup steps.

This is a new FD-controlled installation. FD already contains the power driver for a compatible pump: OUT1 supplies the pump positive side and the pump negative returns to power ground. Identify the exact pump, its running/start/stall current and accepted PWM before rewiring. A mechanical relay is for binary permission, not progressive PWM.

1. Power down and label both pump conductors. Disconnect both original controller-to-pump connections and insulate the old harness ends; never join two output drivers.
2. Connect the dedicated fused feed to J6 pin 1 and both FD grounds at J6 pins 4 and 7. Connect **OUT1/J6-12 → pump positive**, with the pump negative on a rated power return. Keep load current out of J8 sensor ground.
3. Match branch fuse, wire size, PWM frequency and suppression to the pump. OUT1 is designed for 10 A within the shared 30 A supply; check actual start/stall current and simultaneous demand. An external driver is needed only for a specific capacity, polarity, voltage or waveform mismatch.
4. Retain sound fluid hardware and required anti-siphon/physical protection. Give an additional electric valve its own compatible output and explicit OFF state. The pump command alone does not prove nozzle delivery.
5. Install and calibrate the flow, pressure and tank measurements used by the new protection strategy. Test output-off, missing inputs, restart and pump collection away from the engine before enabling normal injection.

9.1 FD pump settings

WMI pump progression uses the configured shared boost-pressure source, even when Fusion Boost actuation is disabled. Open **WMI Control → Connection → Shared boost pressure**. Select the intended onboard, analog, OBD or decoded CAN pressure source supported by the app, verify gauge-pressure units and freshness against a reference, then use **Save shared pressure source** and **Reload saved source**. This saves only the shared measurement selection; it does not enable either controller or prepare an output. Flow, line pressure, tank level and external-demand bindings in WMI Protection serve different roles; they do not choose pump boost demand. Prove missing or stale pressure prevents injection before tuning the curve.

In **Outputs**, enable and name the assigned channel `WMI pump command`, enter the driver's qualified frequency and inspect full-scale calibration. Remove any generic ramp that would unintentionally compound WMI smoothing. Check ownership conflicts.

In **WMI Control > Your WMI installation**, choose **FusionDrive WMI** and the matching **Connection > Pump output**. Use **Injection > Linear ramp** for start-to-full boost, or **Injection > Boost table** for **Pump Duty by Boost** at 5 psi intervals. This is interpolated boost-based control, not a MAF/IDC/FRP command table. Calibrate Minimum/Maximum Duty, Off Below and Smoothing Up/Down against actual response.

Bind real measurements and protection limits. **Expected flow by duty** uses measured envelopes at 0,10…100% command. Include actual output ramp and hydraulic lag when selecting grace. Configure Prime Duty/Default Prime Duration for controlled collection tests; verify Stop Prime and WMI OFF physically stop the pump.

Save WMI Settings, acknowledge and **Reload saved values**. Also save/reload sensors and outputs. Keep WMI enabled OFF until electrical and fluid tests pass. Prove saved ESP control works without the phone; phone logging is tested separately.

SNOW VC-50

10 Commissioning truth table and recovery

Run these checks with injection disconnected from the engine and a controlled collection arrangement. Follow the original manufacturer's permitted test sequence while retaining its controller; do not use FD Prime as a remote native-controller test. Use a dummy electrical load before a live fluid load. Record actual voltage, current, collected flow, pressure, source age and response time, not just app indicators.

Test condition	Route A: retained controller	Route B: FD pump controller
FD unpowered	Native controller remains independent	FD output off; verify pump remains OFF
Phone disconnected	Original injection unchanged; ESP rules keep their saved behavior	Saved ESP control continues; no phone dependency
Native injection disabled by its documented method	Native injection remains OFF; FD must not override it	Removed controller has no electrical authority
Command zero	Log zero demand and absence of unexpected delivery	Pump command OFF; verify no siphoning
Healthy controlled demand	Compare real flow with native state; no inferred flow from duty	Real flow/pressure follow calibrated envelope
Assigned source unplugged/stale	Log the fault; verify any separately commissioned fallback	Physical pump cut and fault latch
Empty tank indication	Original warning preserved; independent FD indication tested	Tank threshold prevents continued injection
Fault corrected, demand still present	Do not clear merely because a sensor recovered	Keep WMI OFF and demand removed before clear
Power cycle	Check native and FD configuration separately	Reload saved ESP values and repeat OFF/ON test

To clear a latched FD WMI fault, remove engine/injection demand, switch **WMI enabled** OFF, restore fresh safe measurements and wait the configured healthy OFF interval. Then use **Clear WMI Fault**. Clearing is not itself an OFF command; if left enabled, operation can resume immediately. Repeat the failed test before accepting recovery. Reconnect nozzles to the engine only after leakage, spray, unintended-flow and power-loss checks pass, then validate the tune under controlled load.

SNOW VC-50

11 Automations and tuner logging

Assign one owner to each output. WMI owns its pump/permit channel; a second rule must not write competing duty there. A protective rule can request **WMI Enable = OFF** with deliberate recovery. Where FD really owns boost, a measured WMI fault can request its commissioned boost OFF/linked protection. That does not command an untouched third-party EBC or guarantee wastegate pressure.

Test a named rule such as `WMI delivery fault — inhibit FD boost`, including missing-source behavior. Do not automatically re-enable on one recovered sample. Save/reload the rule and verify it with the phone disconnected.

Log measured flow, pressure, tank, verified external demand, pump/permit command, WMI faults, automation events, boost, RPM, throttle and available lambda/AFR/ECU data. Inspect actual source intervals: a 50 Hz recorder request cannot create fresh 50 Hz OBD values. Overlay demand onset, physical flow onset and pressure rise as separate traces. Record jets, mixture, ambient conditions and configuration revision. Unexposed native-controller decisions cannot be inferred with certainty from pump activity alone.

Current app workflow: Configure this installation from its function in Settings. Controls provides live actions and the Dashboard provides glance controls; use a card's edit menu to return to setup. A configured output remains visible even when disabled. Enabled rules operate their assigned enabled outputs automatically; there is no extra output mode to select. Live Off, On or duty takes over a generic output until you choose Resume automation. Setup keeps the electrical limits, calibration and response settings. Assigned boost, WMI and nitrous outputs use their controller-specific actions, preserving sensor protections and any paired fuel/stage logic. Nitrous Arm allows its configured activation conditions to operate; it is not an unconditional spray command.

Setup and vehicle data: Starting presets remain editable; Add Sensor includes calibration and fine tuning before Create. Use dedicated IGN, fresh running-engine OBD evidence, or both for vehicle activity; a dedicated IGN wire is optional when valid OBD evidence is available. If the pressure hose is unused, explicitly select OBD pressure in setup. A valid atmospheric sensor reading cannot identify a disconnected hose. These app choices do not change the product-specific electrical compatibility or limitations described below.

12

SNOW VC-50

Sources and release record

- Snow VC-50 · 210 / 210-BRD · New Style — manufacturer instruction manual. Reviewed pages **7–11; fluid hardware 2–6**. Keep this exact revision with the vehicle record.
- FD UI basis: `WMIControlView.swift`, `WMIMonitoringView.swift`, sensor configuration, output configuration and hardware map in the local FD V3 project, reviewed 12 September 2026. This source review establishes menu names and intended behavior, not a completed hardware test.
- Product image: see the caption and local `wmi/image-manifest.json` for original manufacturer location, exact subject and SHA256.

Installer record: vehicle, controller serial/revision, FD board/firmware revision, pump/driver model, sensor transfers, channel map, protective thresholds, native settings, fuse/wire selections, test date, results and responsible installer. Mark this design released only after the actual matched hardware and every applicable truth-table condition have passed. Unknown driver ratings or missing source definitions are open work, not permission to assume compatibility.

Questions?

Documentation · fusiondrive.io/docs

Support · in the app: More → Settings → Device & firmware → Report an Issue

Review library · Local FD V3 / accessory-integration / model-guides

FusionDrive switches real current to real loads and can control boost, water/methanol injection and nitrous. Fuse every feed and every load, respect the ratings in the specifications, and set failsafes before you drive. Configure and tune with the vehicle stationary. The installer is responsible for compliance with local vehicle regulations. Independent local review draft. Exact-model electrical compatibility and the commissioning tests in this guide have not received physical sign-off. Product photographs and manufacturer names identify equipment only; no manufacturer endorsement is implied. Follow the matching original manual and the qualification requirements for each proposed interface. No universal replacement or load-rating approval is given.