EXACT-MODEL INSTALLATION GUIDE

NX Maximizer 6

Retain native control with added permission, or plan an FD-owned stage. Wiring, configuration and commissioning.

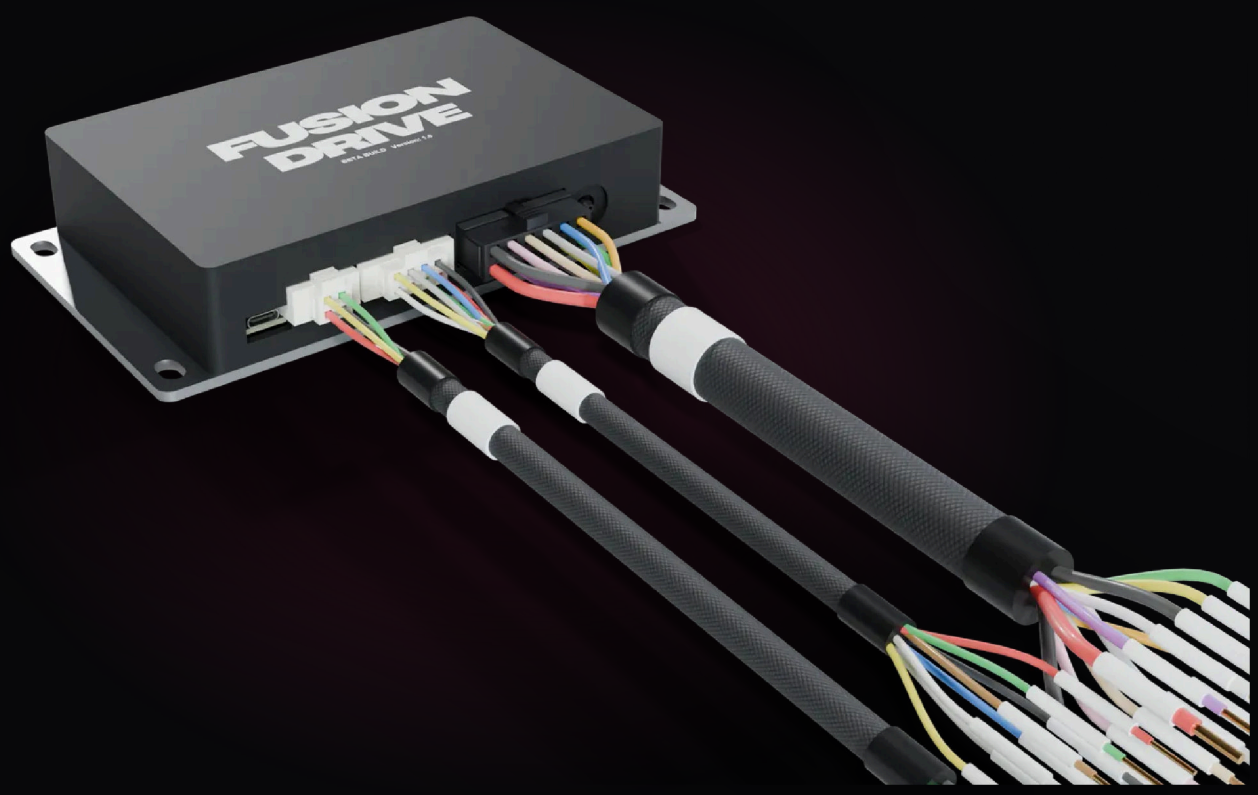

Contents

1 **Identify this exact controller** 2

2 **Wiring diagrams** 3

W1 · Nitrous Express Maximizer 6 · 16011 — retain controller, added permission · W2 · NX Maximizer 6 · direct FD wet-stage wiring · W3 · Nitrous Express Maximizer 6 · 16011 — independent measured fuel pressure

3 **Prepare the installation record** 12

4 **Route A — keep this controller and add the interface** 13

What FD can monitor on this model

5 **Route A — configure FD as the additional permission** 14

A concrete local automation

6 **Route B — decide what must transfer** 16

7 **Route B — replace the controller's load-control function** 17

Build the measurement path first · Set up the current FD Nitrous screen

8 **Prove both the intended action and the failure state** 19

Logging for the tuner

9 **Sources and review scope** 20

NX MAXIMIZER 6

1 Identify this exact controller

Maximizer 6, SKU 16011. Scope is the March-2025 filename nxmaximizer6ins-3-25.pdf currently linked from the manufacturer's live support index. A search-indexed November-2025 file returned 404 during this review; its contents have not been assumed.

Nitrous Express Maximizer 6 · 16011: manufacturer product photograph for identification; not a connector mating-face drawing.

MAX6 uses TAN for positive Input #2 and retains its required small BLUE throttle input. Native software documents per-output arm behaviour. The current product page and this manual differ in their advertised power-stage ratings; neither establishes a safe FD load rating. [N1, pp. 3–9; N2]

> **INSTALLATION NOTE**
> TAN is the MAX6 input; DARK BROWN is the MAX5 input. Their similar cases are not wiring identification.

Exact node	Direction / purpose	Treatment in this guide
TAN, small gauge	Positive Input #2	Additional arm input through isolated NO contact
BLUE, small gauge	Required TPS/WOT input	Keep its existing native connection
GREY/RED; YELLOW/RED	Stage 1 retard ground / positive outputs	Condition separately; these are outputs
GREY/BLUE; YELLOW/BLUE	Stage 2 retard ground / positive outputs	Do not join outputs
WHITE/GREEN	Solenoid-percent reference	No documented direct FD transfer
Large BLUE / RED; ORANGE / sensor BLACK	Solenoid drivers; sensor supply/reference	Retain native allocation in Route A

NX MAXIMIZER 6

2 Wiring diagrams

Start here for the actual wire connections. First locate the FD leads, then choose the drawing for the route you are installing.

Harness B · J6 · 12-way

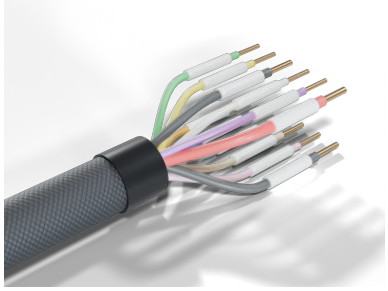

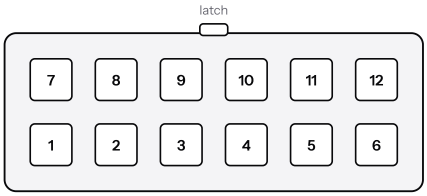

Bottom row, left to right: 1 BATT+ · 2 AUX1 · 3 IGN · 4 GND · 5 CAN2 H · 6 CAN2 L
Top row, left to right: 7 GND · 8 AUX2 · 9 OUT4 · 10 OUT3 · 11 OUT2 · 12 OUT1

Looking into the plug's mating face with the latch at the top

Original FusionDrive harness reference. Look into the plug mating face with the latch at the top. Wire drawings show logical terminal positions.

Harness C · J8 · 8-way

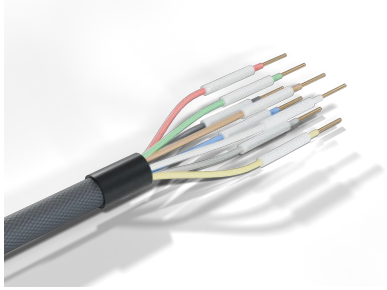

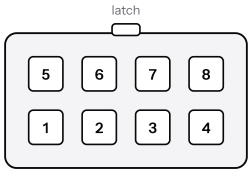

Bottom row, left to right: 1 IN1 · 2 IN2 · 3 IN3 · 4 +5V OUT
Top row, left to right: 5 IN4 · 6 IN5 · 7 IN6 · 8 GND

Looking into the plug's mating face with the latch at the top

Original FusionDrive harness reference. Look into the plug mating face with the latch at the top. Wire drawings show logical terminal positions.

Wire colours match the FD flying leads; the accessory segment uses its documented colour where known. A small sleeve marks an insulated splice. Match the lead label and cavity number. Harness B AUX1/AUX2 are low-side ground sinks. OUT1–4 supply positive voltage from the dedicated feed. Harness C inputs accept conditioned 0–5 V signals. Never join competing supplies or output drivers.

1. **W1 · Nitrous Express Maximizer 6 · 16011 — retain controller, added permission**
2. **W2 · NX Maximizer 6 · direct FD wet-stage wiring**
3. **W3 · Nitrous Express Maximizer 6 · 16011 — independent measured fuel pressure**

2.1 W1 · Nitrous Express Maximizer 6 · 16011 — retain controller, added permission

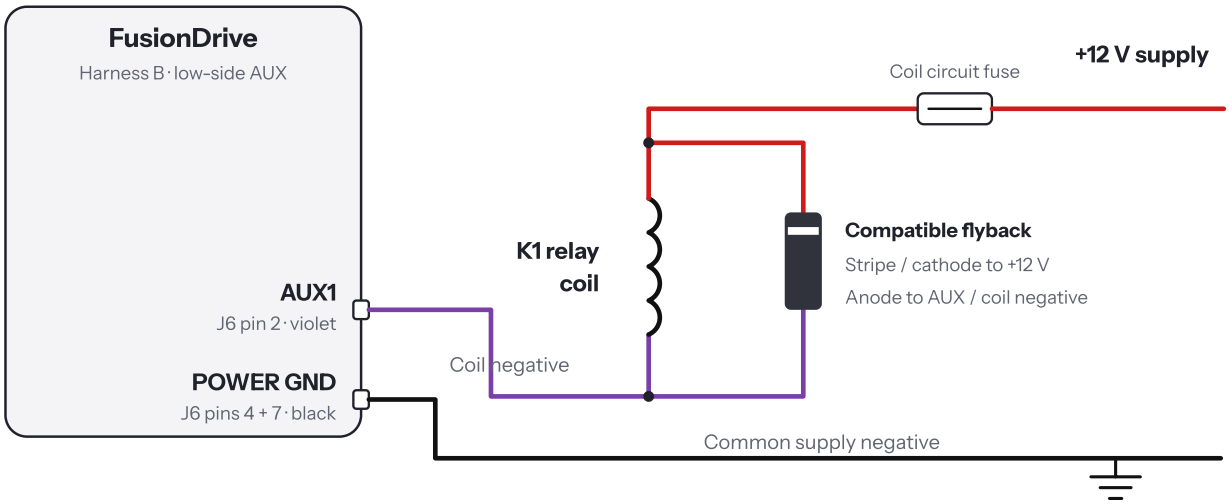

K1 CONTACTS · electrically isolated from the coil

Fused +12 V through native arm

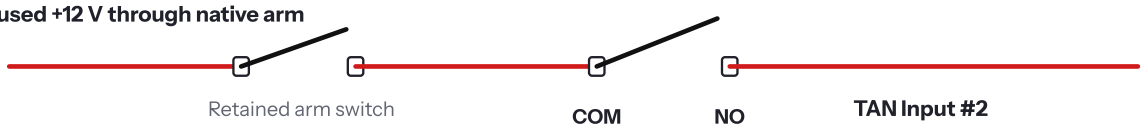

K1 shown with coil OFF

Coil and contact circuits remain separate. A mechanical relay is binary only: 0% or 100%.

NO closes only when energized; OFF interrupts the permitted path.

Match coil current, suppression polarity and contact ratings to the selected relay before installation.

Isolated normally-open contact supplies the manufacturer-documented positive secondary input. Native TPS, RPM, native protections and any original transbrake function remain intact.

Terminal-to-terminal wiring schedule

From	To	Signal / electrical condition
Fused switched +12 V	K1 coil positive	Relay coil supply positive
K1 coil negative	FD AUX1 — J6 pin 2	Coil low-side control sink when ON
FD J6 pins 4 and 7	Power return network	FD power ground reference
Existing fused/physically armed +12 V	K1 isolated COM	Controller-domain permit supply positive
K1 isolated NO	Nitrous Express Maximizer 6 · 16011 TAN Input #2	Added stage permission positive active

OFF / released: K1 de-energized; NO open; no added positive permission; verify input returns inactive.

ON / active: K1 energized; NO closed; positive permission available only through existing physical arm; native gates still required.

Qualification: Qualify coil current, suppression, contacts, open-input bias, grounding and unpowered states. No internal connection between coil and isolated contacts. Dummy loads first. This is an independent untested integration proposal.

Accessory-side connections · 1

NX Maximizer 6 · accessory-side connections

Accessory connections for the selected route. Grey bands are complete looms; blue dashes are pressure hoses.

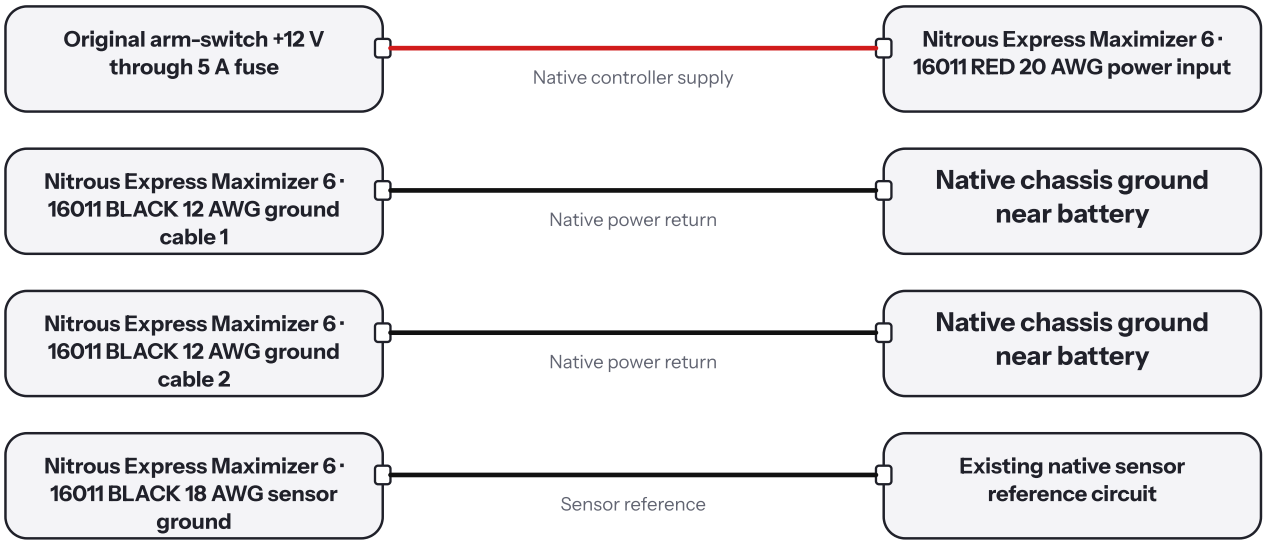

Match the exact harness/revision in the source manual. Unspecified wire colours are drawn black.

Complete the accessory-side circuit for the selected route. Retain or transfer connections as specified in the installation steps; do not join competing supplies or output drivers.

Accessory-side connections · 2

NX Maximizer 6 · accessory-side connections

Accessory connections for the selected route. Grey bands are complete looms; blue dashes are pressure hoses.

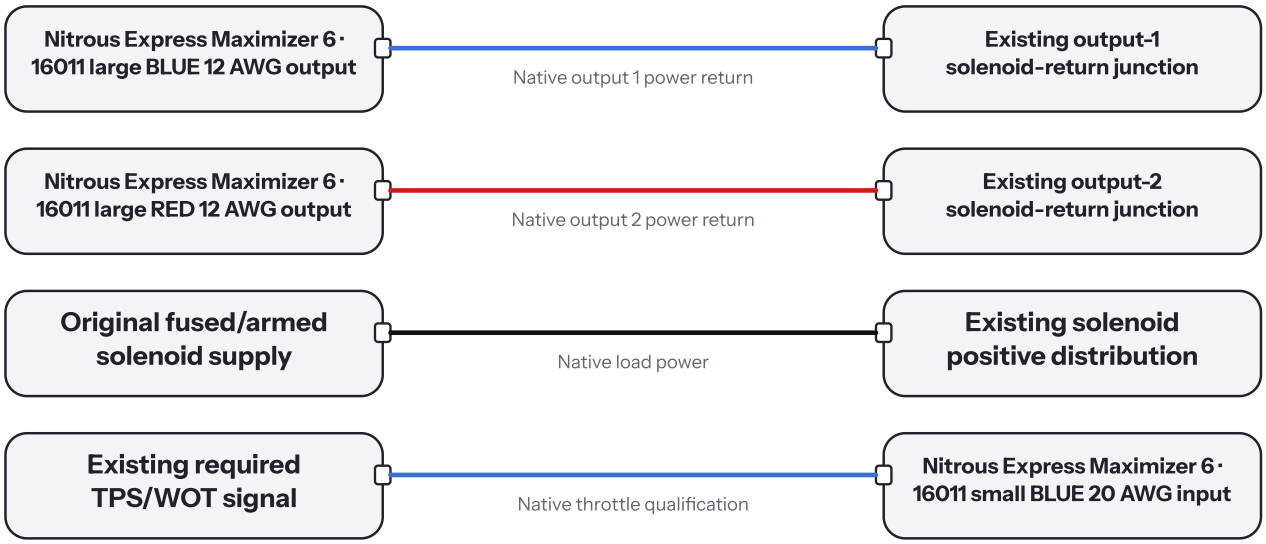

Match the exact harness/revision in the source manual. Unspecified wire colours are drawn black.

Complete the accessory-side circuit for the selected route. Retain or transfer connections as specified in the installation steps; do not join competing supplies or output drivers.

Accessory-side connections · 3

NX Maximizer 6 · accessory-side connections

Accessory connections for the selected route. Grey bands are complete looms; blue dashes are pressure hoses.

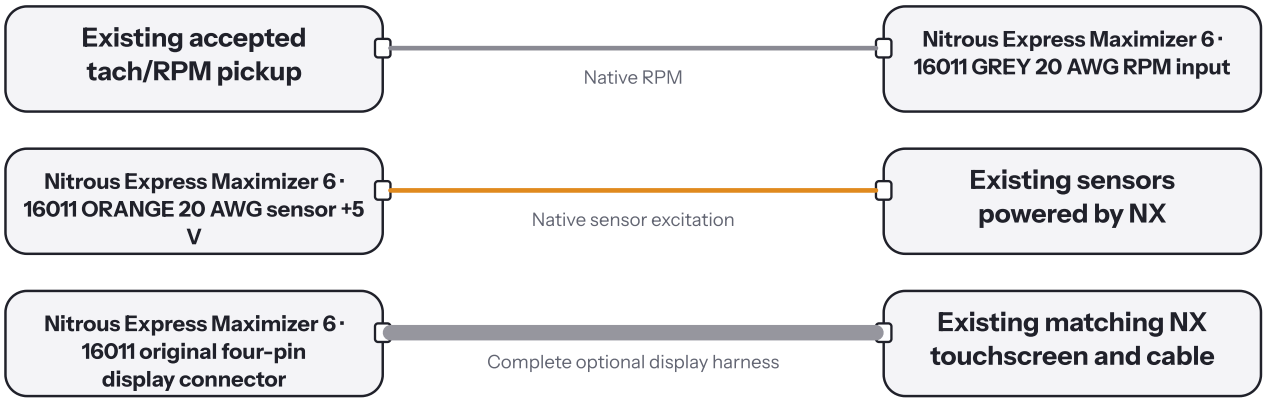

Match the exact harness/revision in the source manual. Unspecified wire colours are drawn black.

Complete the accessory-side circuit for the selected route. Retain or transfer connections as specified in the installation steps; do not join competing supplies or output drivers.

2.2 W2 · NX Maximizer 6 · direct FD wet-stage wiring

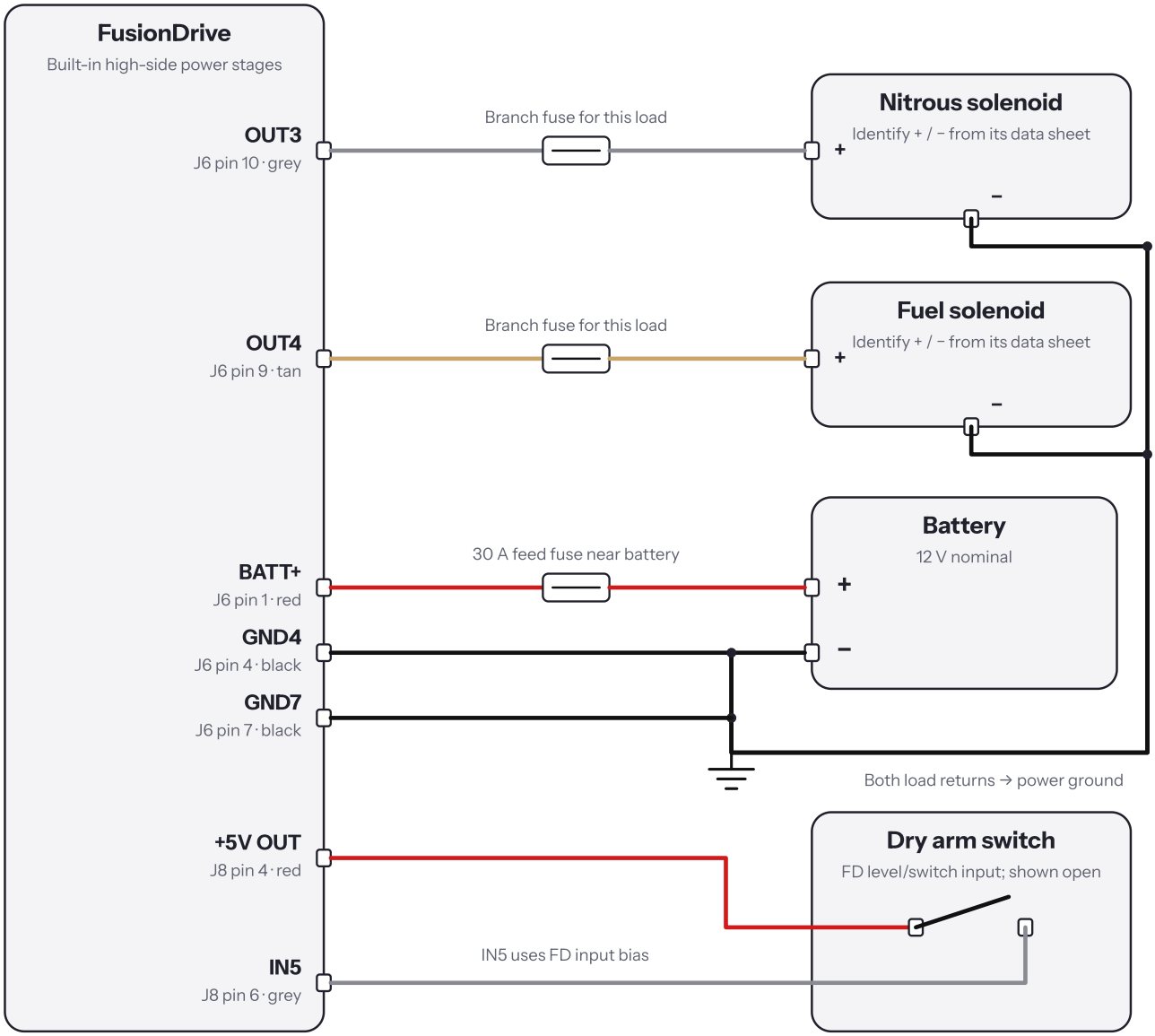

OUT3 / OUT4: separate high-side channels, designed 10 A each within the shared 30 A feed.

Retain a physical arm/interlock. Match suppression and PWM; remove both old solenoid drive circuits.

Disconnect both original driver-to-load conductors. FD supplies the load positive side from its dedicated fused feed; the load negative returns to rated power ground. Use an external power interface only when this load exceeds FD capacity or requires a different electrical drive. The shown 5 V dry switch is an arm-sense input, not a load-current disconnect. Retain an independent physical master arm/isolation path.

Terminal-to-terminal wiring schedule

From	To	Signal / electrical condition
Battery positive through suitable fuse (30 A maximum shared feed)	FD BATT+ · J6 pin 1 · red	Dedicated load supply Positive 12 V
FD GND · J6 pin 4 · black	Rated common power ground	First FD ground Ground
FD GND · J6 pin 7 · black	Rated common power ground	Second FD ground Ground
FD OUT3 · J6 pin 10 · grey via load-sized branch fuse	Nitrous solenoid positive	Nitrous PWM load supply High-side positive
Nitrous solenoid negative	Rated power ground	Nitrous return Ground
FD OUT4 · J6 pin 9 · tan via load-sized branch fuse	Fuel solenoid positive	Fuel PWM load supply High-side positive
Fuel solenoid negative	Rated power ground	Fuel return Ground
FD +5 V · J8 pin 4 · red	Dry arm switch terminal 1	Arm sense supply 5 V only
Dry arm switch terminal 2	FD IN5 · J8 pin 6 · grey	Configured arm-sense input Closed approximately 5 V; verify open state

OFF / released: FD output off removes its sourced load command. Verify the load is inactive, no alternate feed/backfeed remains, and the installation retains its required mechanical or independent protection.

ON / active: The saved FD controller or automation drives the assigned output only when its configured conditions permit. A duty request does not prove measured flow, valve movement or fan speed.

Qualification: FD has four high-side PWM power outputs designed for 10 A each, sharing a 30 A fused feed. A compatible load connects directly to an OUT; no additional driver is needed within its current, inrush, voltage and switching requirements. AUX1/2 are separate 1 A-class low-side sinks. Verify the complete installation on the delivered board; four simultaneous 10 A loads exceed the shared budget. Match load polarity, frequency, suppression, return wiring and physical OFF response; a manufacturer kit name does not establish those values.

2.3 W3 · Nitrous Express Maximizer 6 · 16011 — independent measured fuel pressure

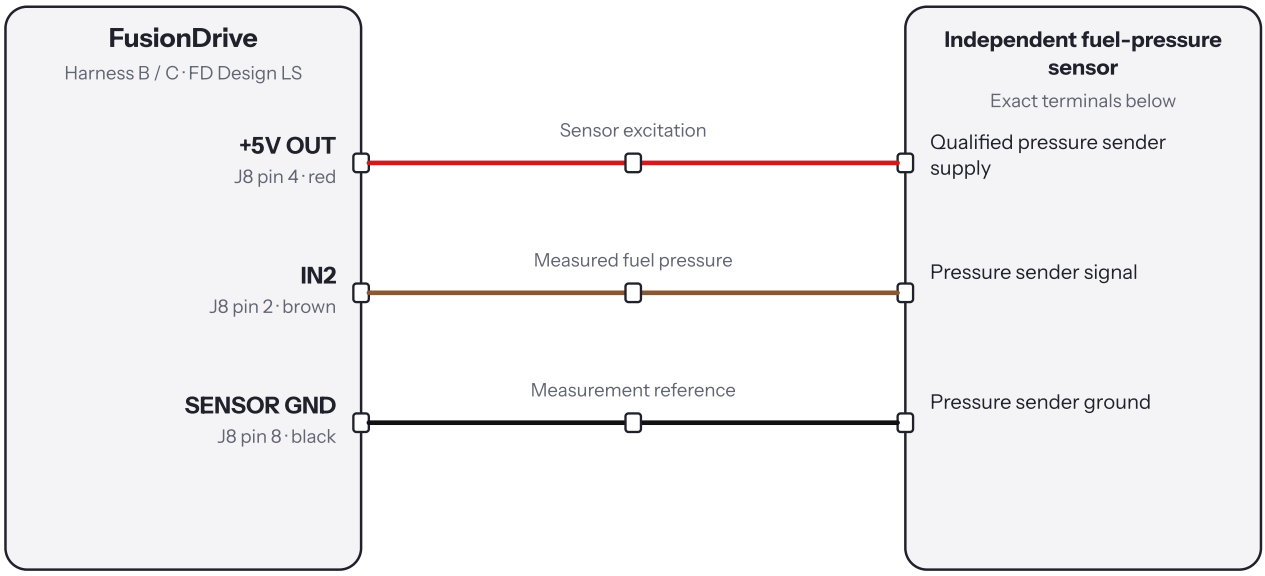

Wire colours: FD loom at left; documented accessory wire at right. Small sleeve = insulated splice.

Connector positions here are logical; use the mating-face drawings to locate FD cavities.

Dedicated documented 5 V linear pressure transducer; its separate measurement avoids an unverified tee into the original controller sensor circuit.

Terminal-to-terminal wiring schedule

From	To	Signal / electrical condition
FD J8 pin 4 — sensor +5 V	Qualified pressure sender supply	Sensor excitation positive 5 V
Pressure sender signal	FD IN2 — J8 pin 2	Measured fuel pressure 0–5 V maximum
Pressure sender ground	FD J8 pin 8 — sensor GND	Measurement reference reference

OFF / released: Disconnected/invalid measurement must not satisfy the permission rule.

ON / active: Only a calibrated, fresh pressure value inside the chosen window can satisfy the example rule.

Qualification: Sender part number, pin letters, supply current, pressure rating and voltage transfer must be identified. Diagram names electrical terminals, not connector cavity positions. Mechanical fuel connection must suit the vehicle.

3

NX MAXIMIZER 6

Prepare the installation record

Choose a route before unplugging anything. Photograph labels, connector orientation and wire destinations. Record native firmware, stage count, wet/dry arrangement, tune, solenoids, fuel strategy and retard receiver. Save the native tune for recovery. Identify terminals and signal direction, not colour alone.

Isolate delivery and use instrumented dummy loads. Keep the physical master arm. Identify both fluids' circuits, including shared relays: a permission change must not leave one fluid active alone. Jetting, engine timing and operating limits remain installation-specific.

FD Design LS has two nominal 1 A-class low-side AUX sinks: AUX1 is J6 pin 2 and AUX2 is pin 8. They do not supply 12 V. OUT1–4 are high-side outputs on J6 pins 12, 11, 10 and 9; their bank uses the dedicated fused feed on J6 pin 1. A 30 A shared feed rating is not a continuous-load qualification. Connect both J6 power grounds, pins 4 and 7. Keep load current out of sensor-reference wiring.

Record interface part number, input current, suppression, contact rating, off-state bias and unpowered behaviour. Fuse actual wires/loads. A large contact rating does not qualify the coil for AUX. Keep coil and isolated contact circuits separate.

NX MAXIMIZER 6

4 Route A — keep this controller and add the interface

An occupied transbrake input requires a reviewed combined circuit. Do not copy the manufacturer's complete transbrake/TPS example into an analog TPS installation merely to free an input. Native permission truth tables must be verified per stage and tune. NX's mixed-brand restriction means this independent wiring proposal is not manufacturer approval.

The manual's second-stage-button example documents Input #2 → arm this output for output 2. For this additional-permission design, every intended stage must demonstrably require the same input while retaining the BLUE TPS/WOT and RPM/safety checks. Inspect each output's setting; an output left on do nothing is outside the permit. Keep the installed AFR-control or conventional mode and its matching wiring. [N1, pp. 5–9]

> Use wiring diagram W1 in the Wiring diagrams chapter for the exact connections. Return here for the installation and app setup steps.

Isolated normally-open contact supplies the manufacturer-documented positive secondary input. Native TPS, RPM, native protections and any original transbrake function remain intact. K1 de-energized; NO open; no added positive permission; verify input returns inactive. K1 energized; NO closed; positive permission available only through existing physical arm; native gates still required.

Build the coil circuit from the fused switched supply to coil positive, then coil negative to AUX1. Keep the isolated contact wiring in the existing controller's domain. If a diode is the qualified suppression method, its cathode faces coil positive; follow the relay specification when suppression is internal. Confirm the actual coil rating against AUX before energizing. The first test is a disconnected dummy-load test, not a live nitrous command.

Do not change the original delivery wiring, throttle calibration, RPM source, stage curve or fuel/timing strategy while adding this permission. Verify the native installation works before the change, and compare the same dummy-load conditions afterward. A stage that can now run with its native WOT or RPM condition false has been bypassed and must not be commissioned.

4.1 What FD can monitor on this model

Retain native MAX6 logs for internal inputs and decisions. FD can overlay independently measured pressure, mixture and its permission request, but cannot infer all native states from TAN. Do not connect the WHITE/GREEN reference until its electrical definition is supplied. Do not describe the display connector or unspecified serial/network pins as a supported FD CAN interface.

5

NX MAXIMIZER 6

Route A — configure FD as the additional permission

Current app workflow: Configure this installation from its function in Settings. Controls provides live actions and the Dashboard provides glance controls; use a card's edit menu to return to setup. A configured output remains visible even when disabled. Enabled rules operate their assigned enabled outputs automatically; there is no extra output mode to select. Live Off, On or duty takes over a generic output until you choose Resume automation. Setup keeps the electrical limits, calibration and response settings. Assigned boost, WMI and nitrous outputs use their controller-specific actions, preserving sensor protections and any paired fuel/stage logic. Nitrous Arm allows its configured activation conditions to operate; it is not an unconditional spray command.

Setup and vehicle data: Starting presets remain editable; Add Sensor includes calibration and fine tuning before Create. Use dedicated IGN, fresh running-engine OBD evidence, or both for vehicle activity; a dedicated IGN wire is optional when valid OBD evidence is available. If the pressure hose is unused, explicitly select OBD pressure in setup. A valid atmospheric sensor reading cannot identify a disconnected hose. These app choices do not change the product-specific electrical compatibility or limitations described below.

Keep **More → Nitrous → FusionDrive Nitrous → System Enable** off. The current dedicated Nitrous screen controls FD-owned stages; it is not a remote editor for this retained controller. Use **Sensors**, **Outputs** and **Automations** for the added interface.

1. In **Sensors**, configure IN1 as `Physical nitrous permission` using a qualified 0–5 V switch interface. J8 pin 1 is IN1; sensor ground is J8 pin 8. A dry contact alone does not create a defined voltage. Set threshold, hysteresis and reverse logic; prove OFF, ON and disconnected states.
2. Configure IN2, J8 pin 2, as `Measured fuel pressure`. Enter the actual sender's voltage/value endpoints and units. Show it on the dashboard. Test low, middle and high points against a reference. Do not copy another sender's calibration or join two 5 V supply outputs.
3. In **Outputs**, select AUX1 and name it `Nitrous permission relay`. Enable it, choose an appropriate output preset, set minimum 0%, maximum 100%, and initial duty 0%. Disable generic ramp/calibration for immediate binary operation. A mechanical relay receives only 0% or 100%, never intermediate duty.
4. Save and wait for acknowledgment; reload the device configuration. Confirm the channel is free of boost, WMI, EBC and dedicated nitrous ownership. If a second separate relay is used, repeat on AUX2 and include both actions in the same permit rule.
5. With loads isolated, command 100%, measure the contact and native input response, then return to 0%. Acknowledgment alone does not prove the external response.

> Use wiring diagram W3 in the Wiring diagrams chapter for the exact connections. Return here for the installation and app setup steps.

5.1 A concrete local automation

Create `Allow nitrous only with valid fuel pressure`. Set **Condition Logic → ALL conditions (AND)**. Add: physical permission ON; measured fuel pressure above the installer's lower limit; below the installer's upper limit; its input **Valid** true; and its **Acquisition age** within the measured acceptance limit. These are five conditions. Preserve the original controller's RPM/WOT and other safety gates independently.

Under **Add Action**, choose the named AUX channel's **On/Off** target and ON; enable **Restore Previous Value When False**. This restores the captured prior value, so begin at 0% and keep this rule the sole owner. Do not manually latch permission ON or allow another rule to change the captured baseline. Use zero release delay for withdrawing this example permission; choose activation delay, maximum active time and cooldown from the accepted installation behaviour, not generic numbers.

Save, acknowledge and reload. Record false/true, missing-input, disabled-rule and restart tests. The rule must run locally without the phone and release permission on every expected exit. Resolve any mismatch before proceeding.

6

NX MAXIMIZER 6

Route B — decide what must transfer

Four-stage operation, native AFR correction, speed/TPS/boost progression and internal logging are not a complete FD feature match. The existing power stage does not move into FD with the harness. If a dry installation depends on MAX6's reference driving ECU fuel, establish the replacement enrichment path before removal. FD does not emit an undocumented equivalent reference.

List each used function as reproduced, retained or unavailable. Keep the existing controller when a required function is unavailable. App options cannot replace missing fuel enrichment, ignition strategy, power drivers or sensing electronics.

7

NX MAXIMIZER 6

Route B — replace the controller's load-control function

Retain suitable bottle/delivery hardware, fuel system and physical interlocks. Remove old driver connections from transferred loads; two active drivers must never share a solenoid. Retain electronics still needed for sensing or ECU enrichment.

> Use wiring diagram W2 in the Wiring diagrams chapter for the exact connections. Return here for the installation and app setup steps.

The example is **one wet stage**: OUT3/J6-10 supplies nitrous-solenoid positive and OUT4/J6-9 supplies fuel-solenoid positive through suitable branch protection. Both negative terminals return to rated power ground. FD has the power drivers built in; fit its dedicated fused J6-1 feed and both grounds. Each load must fit the 10 A design capability and the shared 30 A supply. Higher-current or incompatible loads need the appropriate external stage; AUX is not a heavy solenoid supply.

The old controller may have switched the negative side. Disconnect both old driver connections and rewire positive and negative explicitly for FD high-side control; do not move an old low-side return wire onto OUT. Check inrush, frequency, suppression and physical isolation before injection.

7.1 Build the measurement path first

Configure valid RPM and throttle sources plus the required physical arm, fuel/bottle pressure and wideband signals. FD IN1–IN6 are conditioned analog inputs, not tach, injector, crank or solenoid pulse counters. An old direct tach wire cannot move straight to an IN pin. Use documented CAN/OBD data or an appropriate conditioner and measure end-to-end response. An available OBD PID may be too slow for a protection you rely on.

A wideband needs its compatible powered controller. FD receives its documented interpreted output; it cannot operate a raw oxygen sensor. Enter units, voltage transfer, sensor validity and freshness deliberately. Label requested values separately from measured values. A controller command does not measure current, valve travel or fluid delivery.

7.2 Set up the current FD Nitrous screen

1. In **Outputs**, enable the two direct OUT load channels. Use **Save Output Setup**. Set the validated frequency and duty limits explicitly. Selecting **Nitrous Solenoid** fills starting frequency and duty limits; it does not establish load compatibility. Enter the required exact value in Switching frequency; the software range does not establish a safe frequency for this load.

2. Open **More → Nitrous → FusionDrive Nitrous** with **System Enable OFF**. In **Profiles**, turn on **Independent stages**, enable only Stage 1, choose wet operation, and map Stage 1 nitrous to OUT3 and fuel to OUT4. This example uses two shared channels, not two new virtual outputs.
3. In **Profiles**, select the profile to edit (A, B or C). Configure the intended RPM window, throttle minimum, delay, maximum on-time, cooldown and reset behaviour. Choose each nitrous/fuel curve separately: fixed duty, time progression or RPM table as supported. Re-enter a validated curve; no native tune file import exists.
4. In **Connection → Outputs & Arm Input**, enable **Require arm signal** and choose the tested arm input. Review **Gate input timeout**. Under **Protection**, in the gate-source selectors, bind RPM and throttle and each enabled speed/temperature source. A selected but stale source is not acceptable evidence.
5. In **Protection**, enable the required **Fuel pressure interlock**, **Bottle pressure interlock** and **Measured mixture lean interlock**. Select each real measurement, units, limits, freshness and applicable trip timing. A disabled sensor interlock provides no measured protection. A lean cut does not continuously correct fuel delivery toward an AFR target.
6. If a separate ignition system needs a retard request, use a spare electrically compatible output under **External ignition retard request**. Set lead/tail timing and configure the retard amount in the receiving equipment. FD does not impose ignition timing on a stock ECU or verify actual degrees of retard.
7. Use **Save Nitrous Settings**, then **Reload saved configuration**. Compare every returned mapping, source and curve. Restart with dummy loads: nitrous requires re-enabling after reboot/fault reset, although saved automations can also enable it. Review those rules before testing.

For a dry stage, use one nitrous command and preserve a separately validated enrichment strategy; deleting the fuel output does not create that strategy. Additional wet stages need two channels each. Up to three dedicated stages share all six FD outputs with boost, WMI and other accessories. The original stage count alone does not establish an available or suitable FD output allocation.

NX MAXIMIZER 6

8 Prove both the intended action and the failure state

Record measured results, timestamps and waveform/log references beside this matrix. These are tests still to be performed, not a claim of completed compatibility testing.

Test condition	Route A: retained controller	Route B: FD-owned stage
Physical master arm OFF	No delivery despite an FD permit request	No delivery despite software enable
FD unpowered, booting or updating	Contact returns to the specified blocking state	Both FD output commands stop and loads turn off
Permission ON, native WOT false or RPM outside window	Native controller still blocks every relevant stage	Configured FD throttle/RPM gates block the stage
WOT/RPM eligible, added permission OFF	No retained stage covered by the interface may fire	Arm/enable gate blocks the configured stage
Every required gate true, dummy loads fitted	Native accepted progression only	Saved FD nitrous/fuel curves only
Fuel pressure invalid, out of limits or stale	Additional permission withdrawn	Required measured interlock blocks/cuts
Permission removed mid-ramp	Nitrous and fuel stop coherently; verify native restart behaviour	Coherent stop; verify reset, cooldown and retard release
Phone disconnected	Saved local rule continues; no dependency on the screen	Saved local controller continues; no dependency on the screen
Another tune or stage selected	Its own permit assignment and native gates remain required	Correct profile, output ownership and source mapping

Measure relay input, contacts and driver output together. Check current, ground offset, transients, suppression and temperature over the duty cycle. Test required sensor/data loss. A welded contact or stuck driver can defeat software permission; preserve physical isolation and independent protection.

8.1 Logging for the tuner

Log permission, available external status, measured fuel/bottle pressure and lambda, RPM/TPS, related boost/WMI and rule/controller events. Route B adds profile, requested nitrous/fuel duty and available fault/gate state. Keep Route A native logs; align a dummy-load event before comparing timing.

Inspect actual intervals and missing samples: a 50 Hz recording request cannot accelerate OBD polling or reconstruct missing data. Record on the phone and optionally back up to Cloud. Intelligence interprets collected evidence; it does not validate wiring, mixture or timing.

9

NX MAXIMIZER 6

Sources and review scope

Keep the original tune/harness for recovery. Proceed to a controlled vehicle/dyno test only after interface, source, failure-response and function-transfer sign-off. Save circuit revision, software builds and test evidence with this manual.

[N1] Nitrous Express Maximizer 6 · 16011 manufacturer installation manual. Scope and page references: 3–4, 5–9, 10–13; PDF page numbering. https://nitrousexpress.com/content/Instructions/nxmaximizer6ins-3-25.pdf

[N2] Nitrous Express Maximizer 6 · 16011 official product/support page. https://nitrousexpress.com/progressive-nitrous-controllers/maximizer-6-progressive-controller

FD-side references: `docs/V1_LS_HARDWARE_LIMITATIONS.md`; `ios/FusionDrive/Features/Nitrous/NitrousControlView.swift`; `ios/FusionDrive/Features/Automations/AutomationEditorView.swift`; current Sensors/Outputs editors. These local sources establish the FD menus and hardware map, not competitor approval.

Independent FD review, 12 September 2026; no manufacturer endorsement or physical compatibility sign-off. Read the exact OEM manual. Labels identify electrical nodes, not connector-face orientation. Do not transfer wire colours to another model.

Questions?

Documentation · fusiondrive.io/docs

Support · in the app: More → Settings → Device & firmware → Report an Issue

Review library · Local FD V3 / accessory-integration / model-guides

FusionDrive switches real current to real loads and can control boost, water/methanol injection and nitrous. Fuse every feed and every load, respect the ratings in the specifications, and set failsafes before you drive. Configure and tune with the vehicle stationary. The installer is responsible for compliance with local vehicle regulations. Independent local review draft. Exact-model electrical compatibility and the commissioning tests in this guide have not received physical sign-off. Product photographs and manufacturer names identify equipment only; no manufacturer endorsement is implied. Follow the matching original manual and the qualification requirements for each proposed interface. No universal replacement or load-rating approval is given.