EXACT-MODEL INSTALLATION GUIDE

AEM 30-0305 Exhaust temperature

Connect this exact accessory to FusionDrive. Wiring diagrams, app setup, logging and a clear assessment of what can be retained or replaced.

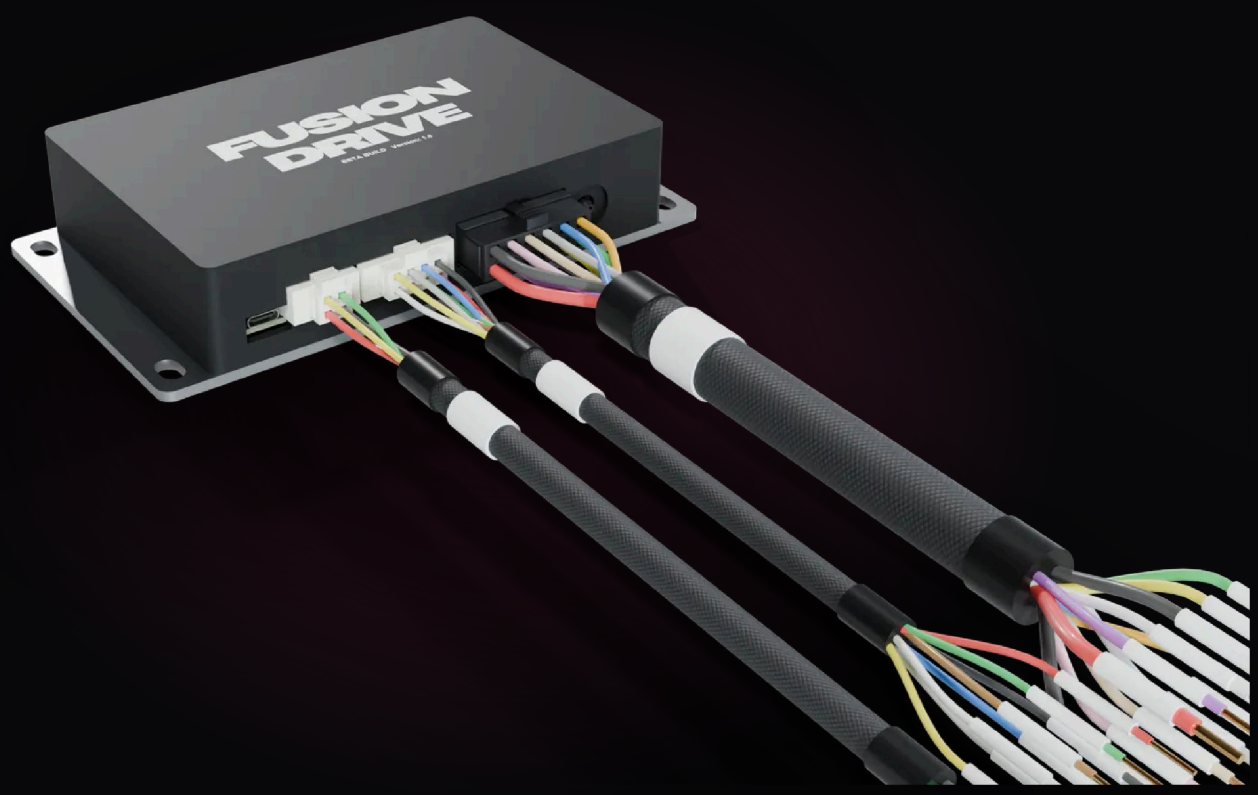

Contents

1 Identify the exact instrument 2

2 Wiring diagrams 3

W1 · 30-0305 retained gauge: full native loom plus FD analogue pair · W2 · 30-0305 retained gauge: CAN2 telemetry

3 Route A - keep the gauge and its sender 8

Native and new wire schedule · Before terminating wires

4 Configure this measurement in FD 9

5 Optional route - receive AEMnet on CAN2 11

6 Route B - remove the gauge or migrate its measurement 12

7 Automations and a useful tuner recording 13

8 Commissioning and failure-state acceptance 14

9 Sources and review scope 15

1

AEM 30-0305 EXHAUST TEMPERATURE

Identify the exact instrument

Keep the EGT instrument and bring its exhaust-temperature measurement into the same timeline as AFR/lambda, boost, RPM and modification activity. Label bank/cylinder and whether the probe is before or after the turbine.

Identification photograph: manufacturer product image for AEM 30-0305, archived from the matching official AEM product page. It identifies the kit; it is not a connector orientation drawing.

This is a researched FD Design LS installation design for local review; physical compatibility has not been bench/vehicle verified. Match the exact model, manual revision and connector orientation before assembly. The drawings show electrical nets, not universal mating-face views.

FD adds shared visibility, local rules and phone logging. It does not alter the stock ECU tune through a logging connection. The ESP stores device settings; phone and portal are views/configurators. Phone recordings and optional cloud backup are separate.

This exact 23 March 2020 kit uses the 35-2054 RTD sensor and 35-3439 RTD loom. It is not a generic K-type thermocouple installation. Do not connect an unknown yellow/red thermocouple or a raw RTD pair directly to FD IN. Probe location, immersion and response time matter to interpretation.

AEM 30-0305 EXHAUST TEMPERATURE

2 Wiring diagrams

Start here for the actual wire connections. First locate the FD leads, then choose the drawing for the route you are installing.

Harness B · J6 · 12-way

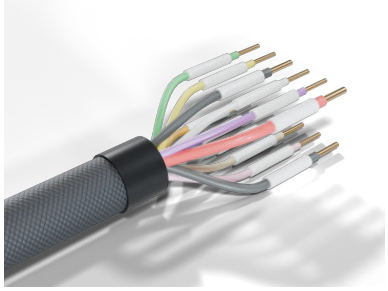

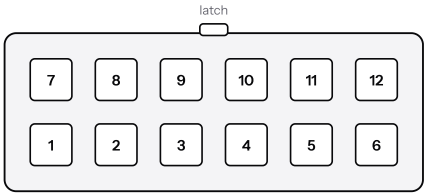

Bottom row, left to right: 1 BATT+ · 2 AUX1 · 3 IGN · 4 GND · 5 CAN2 H · 6 CAN2 L
Top row, left to right: 7 GND · 8 AUX2 · 9 OUT4 · 10 OUT3 · 11 OUT2 · 12 OUT1

Looking into the plug's mating face with the latch at the top

Original FusionDrive harness reference. Look into the plug mating face with the latch at the top. Wire drawings show logical terminal positions.

Harness C · J8 · 8-way

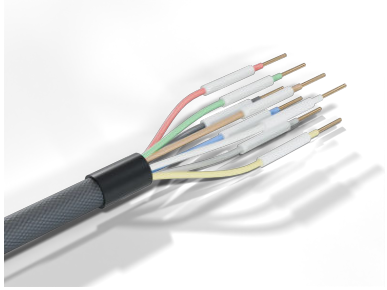

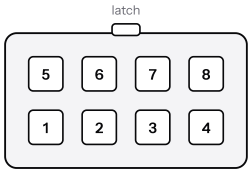

Bottom row, left to right: 1 IN1 · 2 IN2 · 3 IN3 · 4 +5V OUT
Top row, left to right: 5 IN4 · 6 IN5 · 7 IN6 · 8 GND

Looking into the plug's mating face with the latch at the top

Original FusionDrive harness reference. Look into the plug mating face with the latch at the top. Wire drawings show logical terminal positions.

Wire colours match the FD flying leads; the accessory segment uses its documented colour where known. A small sleeve marks an insulated splice. Match the lead label and cavity number. Harness B AUX1/AUX2 are low-side ground sinks. OUT1–4 supply positive voltage from the dedicated feed. Harness C inputs accept conditioned 0–5 V signals. Never join competing supplies or output drivers.

1. **W1 · 30-0305 retained gauge: full native loom plus FD analogue pair**
2. **W2 · 30-0305 retained gauge: CAN2 telemetry**

2.1 W1 · 30-0305 retained gauge: full native loom plus FD analogue pair

Wire colours: FD loom at left; documented accessory wire at right. Small sleeve = insulated splice.

Connector positions here are logical; use the mating-face drawings to locate FD cavities.

30-0305 retained gauge: full native loom plus FD analogue pair

Terminal-to-terminal wiring schedule

From	To	Signal / electrical condition
30-0305 A/9 WHITE	FD IN1 / J8 pin 1	Calibrated analogue output + 0–5 V
30-0305 A/10 BROWN	FD sensor ground / J8 pin 8	Analogue output reference ground

OFF / released: FD absent: native instrument continues; no new FD data

ON / active: FD receives the gauge measurement; it does not command the gauge

Qualification: Retain sender excitation; J8 pin 4 is unused in this route. Valid gauge output 0.5–4.5 V; qualify fault and ground-offset behaviour.

Accessory-side connections · 1

AEM 30-0305 Exhaust temperature · accessory-side connections

Accessory connections for the selected route. Grey bands are complete looms; blue dashes are pressure hoses.

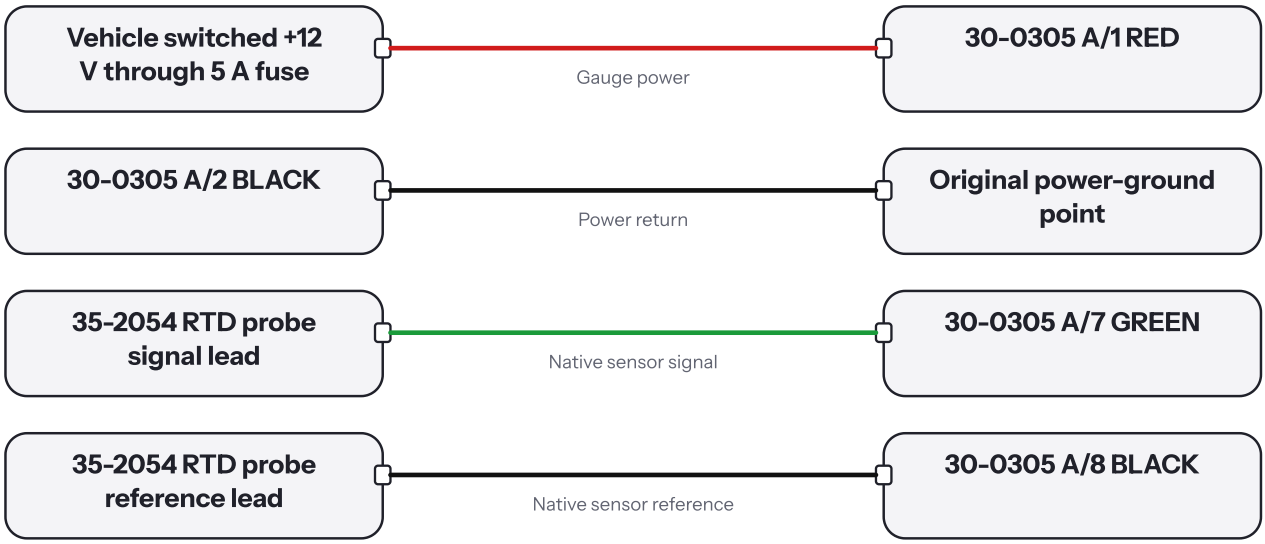

Match the exact harness/revision in the source manual. Unspecified wire colours are drawn black.

Complete the accessory-side circuit for the selected route. Retain or transfer connections as specified in the installation steps; do not join competing supplies or output drivers.

2.2 W2 · 30-0305 retained gauge: CAN2 telemetry

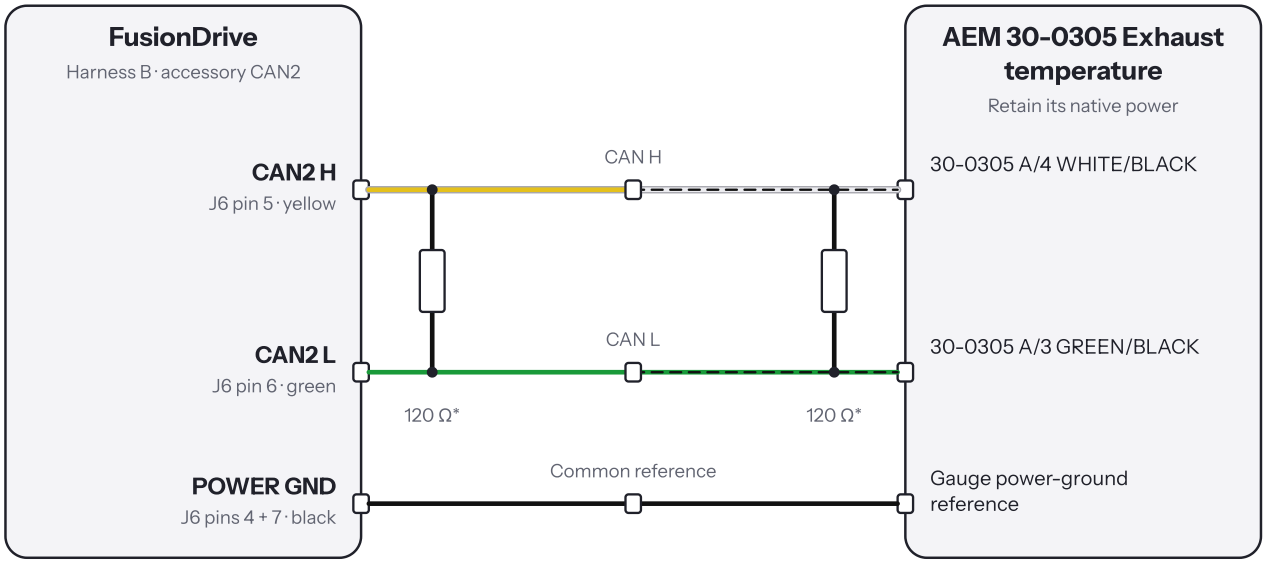

*Exactly two end terminations in the complete bus. Use existing resistors; add only missing ones.

Keep H/L twisted. The reference conductor is separate from the CAN pair. Match bitrate and frame format.

30-0305 retained gauge: CAN2 telemetry

Terminal-to-terminal wiring schedule

From	To	Signal / electrical condition
30-0305 A/4 WHITE/BLACK	FD CAN2 H / J6 pin 5	CAN H CAN differential
30-0305 A/3 GREEN/BLACK	FD CAN2 L / J6 pin 6	CAN L CAN differential
Gauge power-ground reference	FD power ground / J6 pins 4 and 7	Shared power reference ground

OFF / released: Bus absent: native gauge continues; FD marks telemetry stale

ON / active: CAN broadcasts carry the configured measurement

Qualification: 500 kbit/s, 29-bit extended ID; 20 Hz, DLC 8, big endian; two 120 ohm bus-end terminations; gauge has none.

Accessory-side connections · 1

AEM 30-0305 Exhaust temperature · accessory-side connections

Accessory connections for the selected route. Grey bands are complete looms; blue dashes are pressure hoses.

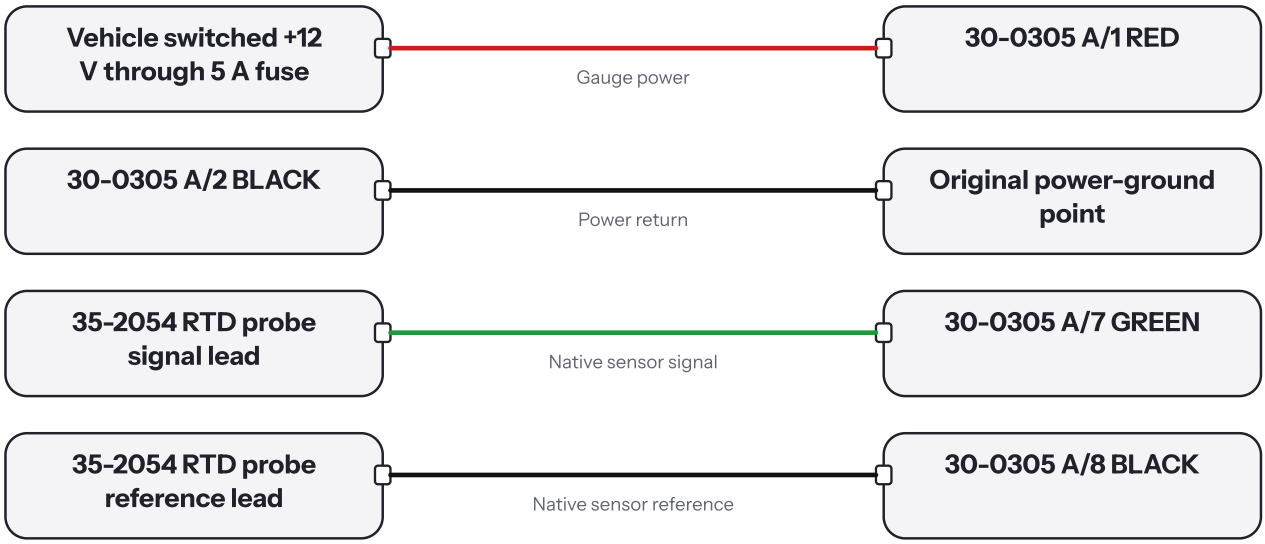

Match the exact harness/revision in the source manual. Unspecified wire colours are drawn black.

Complete the accessory-side circuit for the selected route. Retain or transfer connections as specified in the installation steps; do not join competing supplies or output drivers.

AEM 30-0305 EXHAUST TEMPERATURE

3 Route A - keep the gauge and its sender

The native two-wire RTD probe stays connected to the gauge. Use the gauge's documented logging output; do not substitute the sensor-input wire. Before connecting FD, use the gauge's **WARN** and **PEAK** controls to record display units, warning direction and threshold, and peak-recall behaviour. Retain those settings. A unit change on the gauge face does not authorize changing an output transfer formula.

3.1 Native and new wire schedule

Connection	Native function / FD addition
A/1 RED	Switched 12 V through the specified 5 A fuse; retains gauge power
A/2 BLACK	Gauge power ground; stays on its original clean return
A/7 GREEN	Input from the exact sender; not the FD logging wire
A/8 BLACK	Sender reference; keep native sender circuit intact
A/5–6 NC	No new connection
A/9 WHITE	Analogue output positive → FD IN1 / J8 pin 1
A/10 BROWN	Analogue output negative → FD sensor ground/J8 pin 8
A/4 WHITE/BLACK; A/3 GREEN/BLACK	Optional CAN H; CAN L, described separately below

3.2 Before terminating wires

1. Record model, sender, connector orientation, settings and existing receivers. Save a baseline log, verify native warnings and isolate power/loads.
2. Reserve the illustrated inputs. J8-8 is sensor ground; J8-4 is 5 V and stays unused unless specified. Never parallel active supplies.
3. Preserve power returns. Keep motor/heater current out of sensor ground; insulate, strain-relieve and separate wires from heat/ignition.
4. Check unpowered continuity. Meter operating and fault voltages against FD sensor ground before attaching IN.

AEM permits the differential output's BROWN return to connect to a logger's shared signal ground. Preserve both that return and A/2 power ground. For this route FD J8 pin 4 is unused. Unused CAN wires are separately insulated, not tied together.

4

AEM 30-0305 EXHAUST TEMPERATURE

Configure this measurement in FD

Current app workflow: Configure this installation from its function in Settings. Controls provides live actions and the Dashboard provides glance controls; use a card's edit menu to return to setup. A configured output remains visible even when disabled. Enabled rules operate their assigned enabled outputs automatically; there is no extra output mode to select. Live Off, On or duty takes over a generic output until you choose Resume automation. Setup keeps the electrical limits, calibration and response settings. Assigned boost, WMI and nitrous outputs use their controller-specific actions, preserving sensor protections and any paired fuel/stage logic. Nitrous Arm allows its configured activation conditions to operate; it is not an unconditional spray command.

Setup and vehicle data: Starting presets remain editable; Add Sensor includes calibration and fine tuning before Create. Use dedicated IGN, fresh running-engine OBD evidence, or both for vehicle activity; a dedicated IGN wire is optional when valid OBD evidence is available. If the pressure hose is unused, explicitly select OBD pressure in setup. A valid atmospheric sensor reading cannot identify a disconnected hose. These app choices do not change the product-specific electrical compatibility or limitations described below.

Use real device mode with the ESP connected. These are the current controls in Sensors, not a proposed future setup screen.

1. Tap the empty **IN1 / J8 pin 1** card. Select **0–5 V Generic**, Type **Analog**, name **EGT - AEM 30-0305**, and tap **Create**. The plus button selects the first free slot automatically, so use the named empty card when following this wiring assignment.
2. Open **Edit**. Set Unit **°F** and **Additional voltage scale = 1**. The hardware input divider is already compensated.
3. Under **Calibration**, set Voltage Range **0.5 to 4.5 V** and Value Range **0 to 1800 °F**. Display Range controls presentation; it does not change electrical validity or protect the input.
4. Enable **Show on Dashboard** if wanted. Save, wait for device acknowledgement, refresh and reopen the card to verify stored endpoints, unit and slot.
5. Compare **Connector voltage**, **Current Value** and **Acquisition age** with a reference instrument and the original gauge at several stable points. Save the actual readings and tolerances.
6. Reboot FD with loads disconnected and read the configuration back. Remove the phone and test any intended local rule independently. A saved setting can continue locally; a phone that is absent cannot create a new phone log.

FD currently provides a linear two-point calibration. A plausible on-screen value does not certify that a source is healthy. A raw thermistor, RTD, pulse train or proprietary serial port does not become a supported analogue sensor by selecting a temperature or ethanol label.

Temperature in °F = 450 × voltage − 225. At 0.5 V expect 0°F; at 2.5 V expect 900°F; at 4.5 V expect 1800°F. AEM identifies outside 0.5–4.5 V as sensor error. FD input validity alone is insufficient because an endpoint clamp can hide an error voltage.

5

AEM 30-0305 EXHAUST TEMPERATURE

Optional route · receive AEMnet on CAN2

Instead of consuming an analogue input, connect A/4 WHITE/BLACK to FD CAN2 H/J6 pin 5 and A/3 GREEN/BLACK to CAN2 L/J6 pin 6. Retain the native supply and provide the planned common power reference. This is the accessory bus, separate from vehicle CAN1/OBD. Use a twisted pair with 120 ohm termination at each physical end of the complete bus; do not add two more resistors to an already terminated network. The gauge has no internal terminator.

> Use wiring diagram W2 in the Wiring diagrams chapter for the exact connections. Return here for the installation and app setup steps.

In OBD Settings choose **Accessories · CAN2**, enable the bus, Speed **500 kbit/s**, initially with transmitting off. Use **Save CAN 2 connection** and reload stored settings. On a standalone two-node bus the transmitter needs another active CAN node to acknowledge frames; qualify normal CAN acknowledgement if listening alone prevents traffic, without adding invented application commands or OBD polling.

Open the received **extended 29-bit frame 0x000A0305**, choose **Add signal**, name the accessory and unique channel, and enable decoding. Leave Packed bit layout off; set **Byte offset 0**, **Byte length 2**, **Motorola/big endian ON**, **Signed integer OFF**, **Multiplier 1**, **Offset 0**, Unit **°C**. The published 16-bit value begins at byte 0; verify the two-byte reconstruction on live traffic. For example **02 BC = 700 °C**. The remaining payload is not a source of invented alarm/status bits. AEM specifies DLC 8 and 20 Hz transmission.

Save and reload the definition from ESP, compare with the gauge, and test loss of traffic. Do not treat a recurring CAN frame as proof the physical sensor is valid. Do not log both routes under the same ambiguous name; label one analogue and the other CAN when comparing.

6

AEM 30-0305 EXHAUST TEMPERATURE

Route B - remove the gauge or migrate its measurement

Full gauge removal requires a qualified conditioner for the exact 35-2054 RTD, including the correct excitation and resistance-to-temperature relationship. A generic thermocouple amplifier does not meet that requirement. No matching conditioner part is certified by this guide. Alternatively install a separately documented EGT probe/conditioner with a specified 0–5 V or CAN output. Recalibrate FD to that interface; the AEM gauge output formula is not a calibration for raw resistance or another amplifier. A hidden, powered AEM gauge remains the controller if you only remove it from view.

Before removal, assign an owner for measurement electronics, calibration, display, warning, peak history and any ECU/logger output. Recreate an essential no-phone warning with a separately qualified physical indication. The app's display cannot replace a warning when no phone is present. Preserve the Route A log as the comparison baseline, and repeat all failure checks after changing sensor ownership.

7

AEM 30-0305 EXHAUST TEMPERATURE

Automations and a useful tuner recording

Use EGT to compare repeated operating conditions and investigate trends. It is not a substitute for lambda or knock measurement. Do not commission an engine cut from a single EGT threshold without a tuner-defined strategy and validated sensor-fault behaviour.

Start with a disabled rule called **EGT - AEM 30-0305 - review threshold** and an isolated indicator or dummy load. Use **ALL conditions (AND)**: the named measurement crosses an installer-approved test threshold, its **Valid** field is ON, and its **Acquisition age** is within a tested limit. For an analogue channel, also qualify **Connector voltage** against the accepted source range. These fields appear under the sensor's configured name. CAN freshness and physical validity are different: repeated frames can contain a failed sensor value.

Use a qualified indicator/interface: AUX1 / J6 pin 2 and AUX2/J6 pin 8 sink current; they do not supply 12 V. For a binary AUX test, start at 0, request 100% when true, and enable **Restore Previous Value When False** only with prior value 0 and one output owner. Do not omit required gates to fit rule limits. Independently test source-loss release and latency.

In **Data Log** settings select **EGT - AEM 30-0305**, raw voltage and age where exposed, then add lambda/AFR, RPM, MAP/boost, nitrous request/state and fuel pressure where fitted, relevant controller request/state and automation transitions. Choose active/idle rates and inspect achieved timestamps after leaving the live screen. A source's published update rate is not a promise of that phone recording rate; a 50 Hz request cannot produce new measurements from a 20 Hz source.

Label commands as requests. Record sender location, model, units, calibration and wiring revision. Overlay modification and vehicle traces to investigate events; Cloud/Intelligence can suggest trends, not prove flow or guarantee engine safety from a command.

8

AEM 30-0305 EXHAUST TEMPERATURE

Commissioning and failure-state acceptance

Use isolated loads and an independent reference first. These are required checks, not recorded test results.

Test	Required observation
FD disconnected	Original display, controller and warnings remain correct
Low/middle/high reference stimulus	Calibration matches within agreed tolerance
Source power absent	Missing data does not grant a healthy permission
Signal and reference individually open	Each fault identified; plausible false values documented
Source fault/warm-up	Error is not accepted as a healthy reading
Dummy accessories switching	No ground-noise false trigger
ESP reboot / phone absent	Saved settings return; local actions behave correctly
Logging outside live screen	Achieved timestamps and gaps recorded

An endpoint-clamped analogue value can conceal a failed source. If a required fault is indistinguishable, retain independent native protection or qualify another status source. An unresolved failure state is a hold point.

Record vehicle, FD serial/board, firmware/iOS build, accessory identity/revision, connector photos, occupied IO, calibration, retained/lost functions, test-log files, installer and date. Reconnect accepted loads only, then repeat a controlled functional run. Keep the original configuration and reversal procedure.

9

AEM 30-0305 EXHAUST TEMPERATURE

Sources and review scope

[M1] AEM 30-0305, instruction 10-0305, 23 March 2020, PDF pp 1–3,7–9.
https://documents.aemelectronics.com/techlibrary_30-0305.pdf

Identification photograph: manufacturer product image for AEM 30-0305, archived from the matching official AEM product page. It identifies the kit; it is not a connector orientation drawing.

FD implementation checked against HardwareMap.swift, SensorsView.swift, SensorManager.swift, CANBusConfigurationView.swift, CANDecodeEditorView.swift, AutomationEditorView.swift and DataLog/LogSettingsView.swift in the local FD project. Electrical interfaces and native operating facts above come from the named manufacturer sources. Any extra interface remains conditional until its actual part, wiring, range and fault behaviour are recorded and tested. No live website publication or physical compatibility certification is implied.

Questions?

Documentation · fusiondrive.io/docs

Support · in the app: More → Settings → Device & firmware → Report an Issue

Review library · Local FD V3 / accessory-integration / model-guides

FusionDrive switches real current to real loads and can control boost, water/methanol injection and nitrous. Fuse every feed and every load, respect the ratings in the specifications, and set failsafes before you drive. Configure and tune with the vehicle stationary. The installer is responsible for compliance with local vehicle regulations. Independent local review draft. Exact-model electrical compatibility and the commissioning tests in this guide have not received physical sign-off. Product photographs and manufacturer names identify equipment only; no manufacturer endorsement is implied. Follow the matching original manual and the qualification requirements for each proposed interface. No universal replacement or load-rating approval is given.